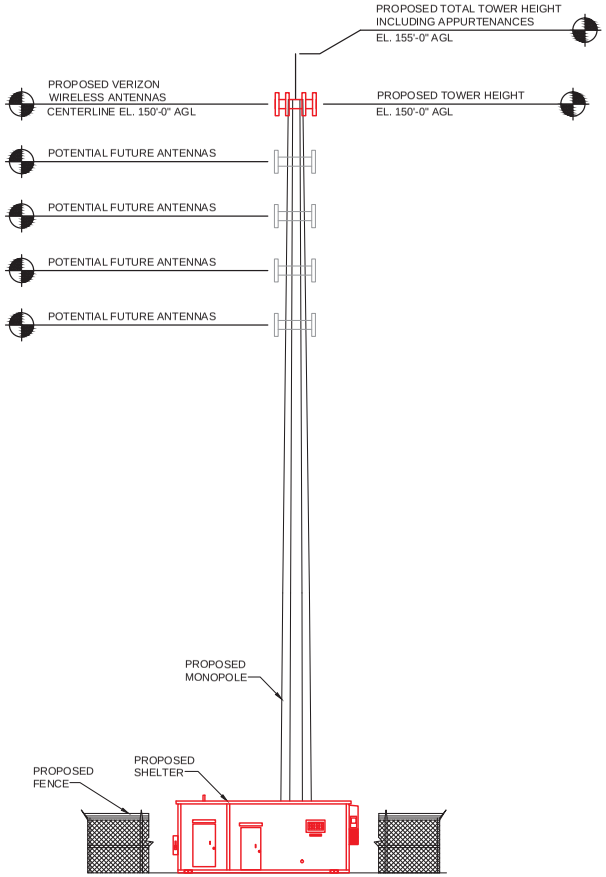

TOWER ELEVATION
NO SCALE

NOTE:
- TOWER AND FOUNDATION DESIGN / CHECK PERFORMED BY OTHERS. (MANUFACTURER)
- THIS CONSTRUCTION DOCUMENT MUST BE ACCOMPANIED BY A SEALED & SIGNED STRUCTURAL ASSESSMENT/ANALYSIS REVIEW MADE BY A LICENSED ENGINEER.

TOWER OWNER:

AMERICAN TOWER

DEVELOPER:

TELECOM DEVELOPMENT SERVICES LLC

A&E FIRM:

TOWERSOURCE
1875 OLD ALABAMA ROAD, SUITE 1008
ROSWELL, GA 30076
TEL 678-990-2338
FAX 678-990-2342
ENGINEER: ELIZABETH B. USHER

THE INFORMATION CONTAINED IN THIS SET OF DOCUMENTS IS PROPRIETARY BY NATURE. ANY USE OR DISCLOSURE OTHER THAN THAT WHICH RELATES TO THE CLIENT IS STRICTLY PROHIBITED.

A&E PROJECT #:	--
DRAWN BY:	WCG
CHECKED BY:	EBU

REVISIONS

NO.	DATE	DESCRIPTION
A	06/24/15	ISSUED FOR REVIEW
0	07/15/15	ISSUED FOR CONSTRUCTION
1	10/1/15	ISSUED FOR CONSTRUCTION

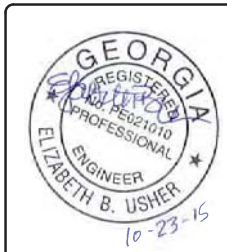

SITE NAME:
PCT SE PAPER GA

TOWER OWNER / SITE NUMBER:
AMERICAN TOWER

DESIGN TYPE:
GREENFIELD

SHEET TITLE:
TOWER ELEVATION

DRAWING NO.: C4

REVISION NO.: 1

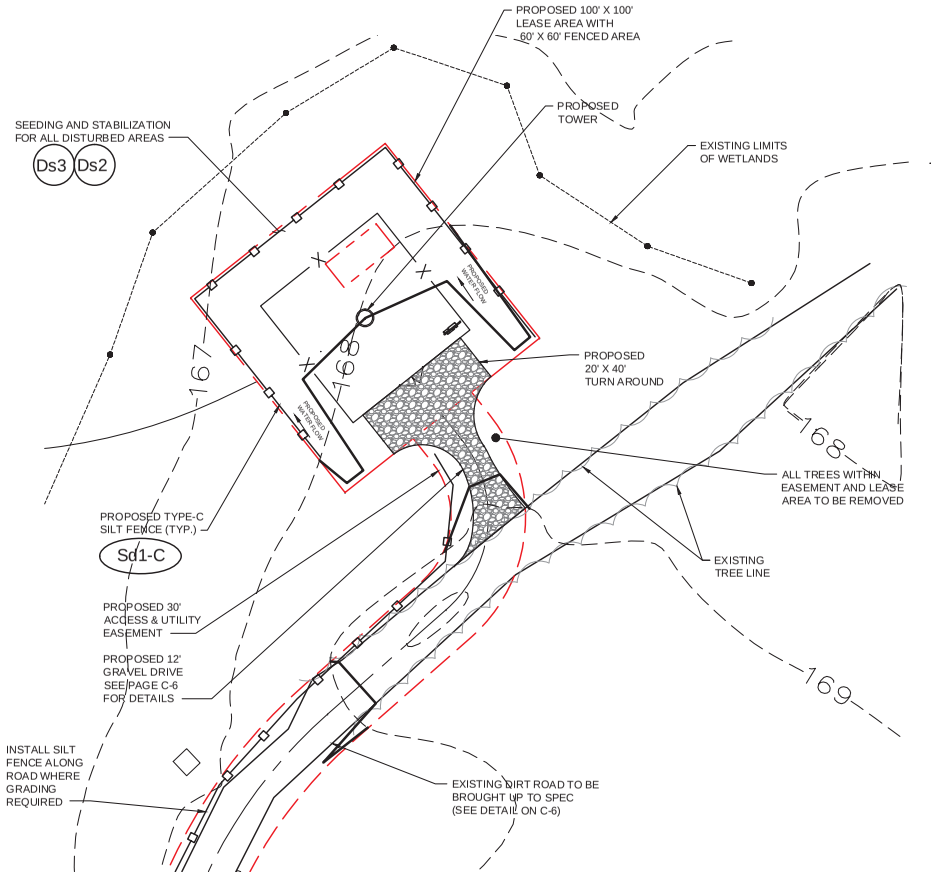

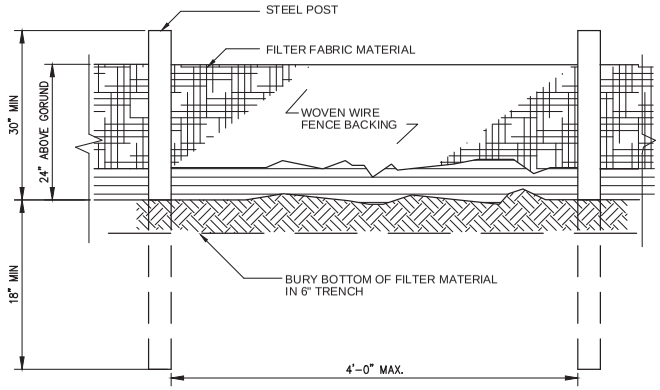

NOTE: USE 36" DOT APPROVED FABRIC
USE STEEL POSTS

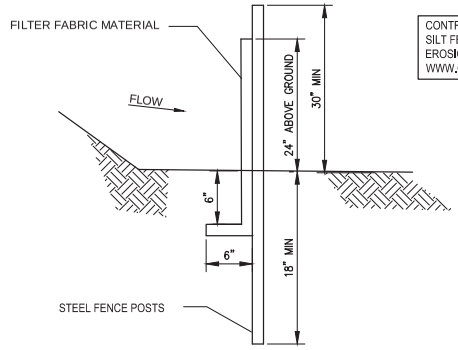

Sd1-S SILT FENCE, TYPE-S

CONTRACTOR RESPONSIBLE FOR MEETING AND MAINTAINING SILT FENCE REQUIREMENTS PER GASWCC 6th EDITION ALL EROSION. SILT FENCE SHOULD BE WIRE REINFORCED. SEE WWW.GASWCC.GEORGIA.GOV FOR MORE DETAILS

EROSION CONTROL MEASURES WILL BE MAINTAINED AT ALL TIMES. IF FULL IMPLEMENTATION OF THE APPROVED PLAN DOES NOT PROVIDE FOR EFFECTIVE EROSION CONTROL, ADDITIONAL EROSION CONTROL AND SEDIMENT CONTROL MEASURES SHALL BE IMPLEMENTED TO CONTROL OR TREAT THE SEDIMENT SOURCE.

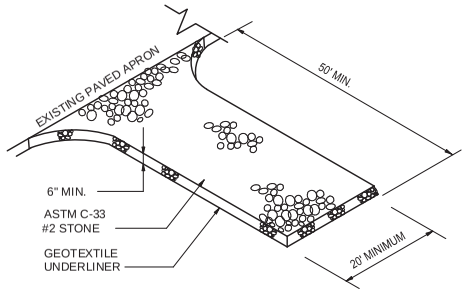

Co CONSTRUCTION EXIT

1) CONTACT THE PLANNING DEPARTMENT AT (770) 254-2354 TO ARRANGE A PRE-CONSTRUCTION CONFERENCE WITH THE CITY LANDSCAPE ARCHITECT PRIOR TO ANY LAND DISTURBANCE.

2) ALL TREE PROTECTION MEASURES SHALL BE INSTALLED AND INSPECTED PRIOR TO THE START OF ANY LAND DISTURBANCE AND MAINTAINED UNTIL FINAL LANDSCAPING IS INSTALLED. CALL THE PLANNING DEPARTMENT AT (770) 254-2354 FOR AN INSPECTION BY THE CITY LANDSCAPE ARCHITECT.

3) NO PARKING, STORAGE, OR ANY OTHER CONSTRUCTION ACTIVITIES ARE TO OCCUR WITHIN TREE PROTECTION AREAS.

4) A MAINTENANCE INSPECTION OF TREES WILL BE PERFORMED AFTER TWO FULL GROWING OF TREES WILL BE PERFORMED AFTER TWO FULL GROWING SEASONS FROM THE DATE OF THE FINAL CONSTRUCTION INSPECTION. PROJECT OWNERS AT THE TIME OF THE MAINTENANCE INSPECTION ARE RESPONSIBLE FOR ORDINANCE COMPLIANCE.

TRUE NORTH

GRAPHIC SCALES

50 0 50

SCALE: 1" =50'-0"

GROUNDING AND EROSION CONTROL PLAN

SCALE: 1" =50'-0"

TOWER OWNER:

AMERICAN TOWER

DEVELOPER:

TELECOM DEVELOPMENT SERVICES LLC

A&E FIRM:
TOWERSOURCE
1875 OLD ALABAMA ROAD, SUITE 1008
ROSWELL, GA 30076
TEL 678-990-2338
FAX 678-990-2342
ENGINEER: ELIZABETH B. USHER

THE INFORMATION CONTAINED IN THIS SET OF DOCUMENTS IS PROPRIETARY BY NATURE. ANY USE OR DISCLOSURE OTHER THAN THAT WHICH RELATES TO THE CLIENT IS STRICTLY PROHIBITED.

A&E PROJECT #:	--
DRAWN BY:	WCG
CHECKED BY:	EBU

REVISIONS

NO.	DATE	DESCRIPTION
A	06/24/15	ISSUED FOR REVIEW
0	07/15/15	ISSUED FOR CONSTRUCTION
1	10/1/15	ISSUED FOR CONSTRUCTION

SITE NAME:

PCT SE PAPER GA

TOWER OWNER / SITE NUMBER:

AMERICAN TOWER

DESIGN TYPE:

GREENFIELD

SHEET TITLE:

GRADING & EROSION CONTROL PLAN

DRAWING NO. C5

REVISION NO. 1

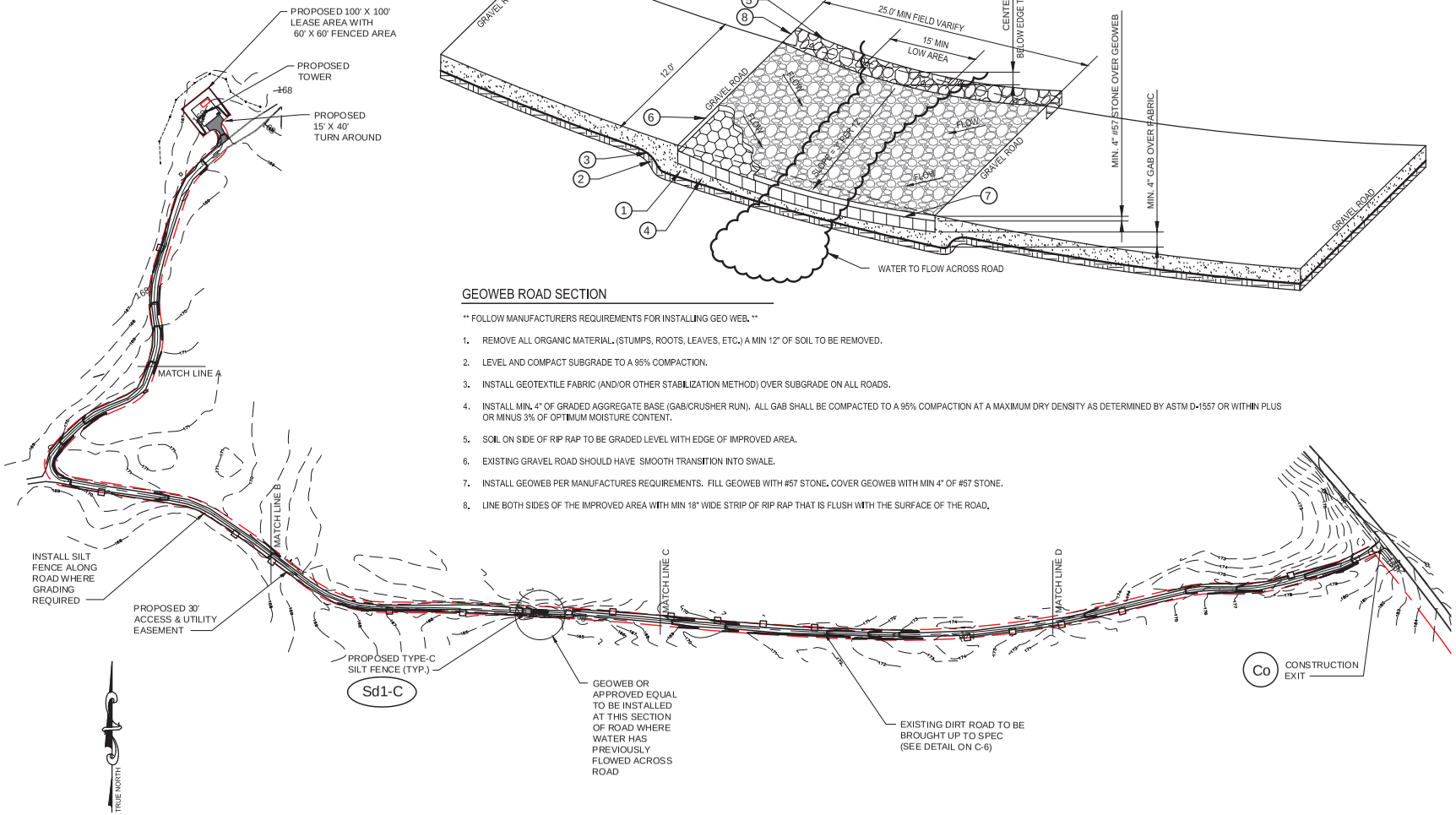

GEOWEB ROAD SECTION

** FOLLOW MANUFACTURERS REQUIREMENTS FOR INSTALLING GEO WEB. **

1. REMOVE ALL ORGANIC MATERIAL. (STUMPS, ROOTS, LEAVES, ETC.) A MIN 12" OF SOIL TO BE REMOVED.
2. LEVEL AND COMPACT SUBGRADE TO A 95% COMPACTION.
3. INSTALL GEOTEXTILE FABRIC (AND/OR OTHER STABILIZATION METHOD) OVER SUBGRADE ON ALL ROADS.
4. INSTALL MIN. 4" OF GRADED AGGREGATE BASE (GAB/CRUSHER RUN). ALL GAB SHALL BE COMPACTED TO A 95% COMPACTION AT A MAXIMUM DRY DENSITY AS DETERMINED BY ASTM D-1557 OR WITHIN PLUS OR MINUS 3% OF OPTIMUM MOISTURE CONTENT.
5. SOIL ON SIDE OF RIP RAP TO BE GRADED LEVEL WITH EDGE OF IMPROVED AREA.
6. EXISTING GRAVEL ROAD SHOULD HAVE SMOOTH TRANSITION INTO SWALE.
7. INSTALL GEOWEB PER MANUFACTURES REQUIREMENTS. FILL GEOWEB WITH #57 STONE. COVER GEOWEB WITH MIN 4" OF #57 STONE.
8. LINE BOTH SIDES OF THE IMPROVED AREA WITH MIN 18" WIDE STRIP OF RIP RAP THAT IS FLUSH WITH THE SURFACE OF THE ROAD.

GRAPHIC SCALES

0

SCALE: 1" =###'-0"

GROUNDING AND EROSION CONTROL PLAN

SCALE: 1" =###'-0"

TOWER OWNER:

AMERICAN TOWER

DEVELOPER:

TELECOM DEVELOPMENT SERVICES LLC

A&E FIRM:

TOWERSOURCE
1875 OLD ALABAMA ROAD, SUITE 1008
ROSWELL, GA 30076
TEL 678-990-2338
FAX 678-990-2342
ENGINEER: ELIZABETH B. USHER

THE INFORMATION CONTAINED IN THIS SET OF DOCUMENTS IS PROPRIETARY BY NATURE. ANY USE OR DISCLOSURE OTHER THAN THAT WHICH RELATES TO THE CLIENT IS STRICTLY PROHIBITED.

A&E PROJECT #:	--
DRAWN BY:	WCG
CHECKED BY:	EBU

REVISIONS

NO.	DATE	DESCRIPTION
A	06/24/15	ISSUED FOR REVIEW
0	07/15/15	ISSUED FOR CONSTRUCTION
1	10/1/15	ISSUED FOR CONSTRUCTION

GEORGIA REGISTERED PROFESSIONAL ENGINEER No. PE021010 ELIZABETH B. USHER

10-6-15

SITE NAME:

PCT SE PAPER GA

TOWER OWNER / SITE NUMBER:

AMERICAN TOWER

DESIGN TYPE:

GREENFIELD

SHEET TITLE:

GRADING & EROSION CONTROL PLAN

DRAWING NO.: C5B

REVISION NO.: 1

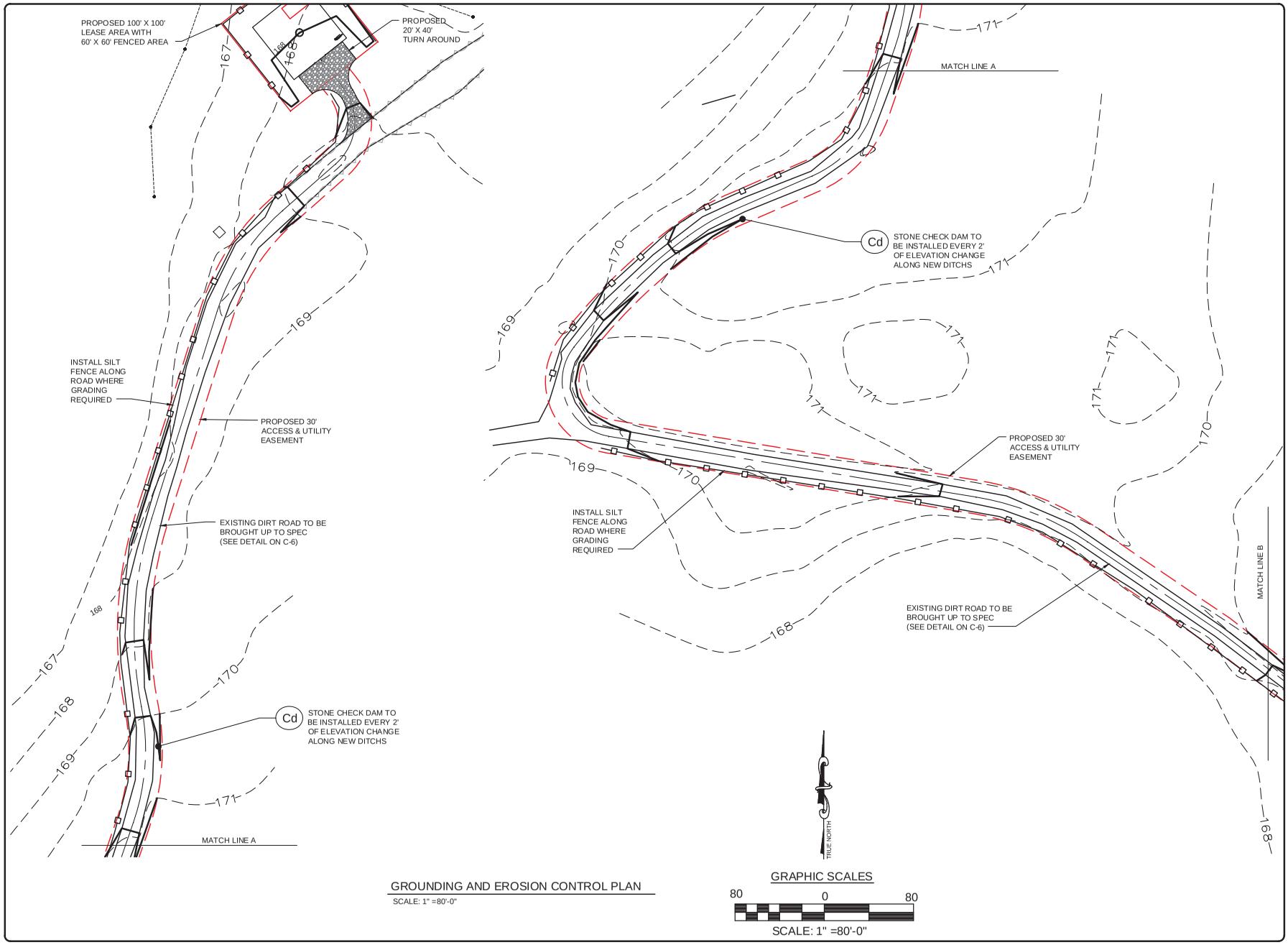

GROUNDING AND EROSION CONTROL PLAN

SCALE: 1" =80'-0"

GRAPHIC SCALES

80 0 80

SCALE: 1" =80'-0"

TOWER OWNER:

AMERICAN TOWER

DEVELOPER:

TELECOM DEVELOPMENT SERVICES LLC

A&E FIRM:

POWERSOURCE
1875 OLD ALABAMA ROAD, SUITE 1008
ROSWELL, GA 30076
TEL 678-990-2338
FAX 678-990-2342
ENGINEER: ELIZABETH B. USHER

THE INFORMATION CONTAINED IN THIS SET OF DOCUMENTS IS PROPRIETARY BY NATURE. ANY USE OR DISCLOSURE OTHER THAN THAT WHICH RELATES TO THE CLIENT IS STRICTLY PROHIBITED.

A&E PROJECT #:	--
DRAWN BY:	WCG
CHECKED BY:	EBU

REVISIONS

NO.	DATE	DESCRIPTION
A	06/24/15	ISSUED FOR REVIEW
0	07/15/15	ISSUED FOR CONSTRUCTION
1	10/1/15	ISSUED FOR CONSTRUCTION

GEORGIA REGISTERED PROFESSIONAL ENGINEER NO. PE021010 ELIZABETH B. USHER

10-6-15

SITE NAME:

PCT SE PAPER GA

TOWER OWNER / SITE NUMBER:

AMERICAN TOWER

DESIGN TYPE:

GREENFIELD

SHEET TITLE:

GRADING & EROSION CONTROL PLAN

DRAWING NO. C5C

REVISION NO. 1

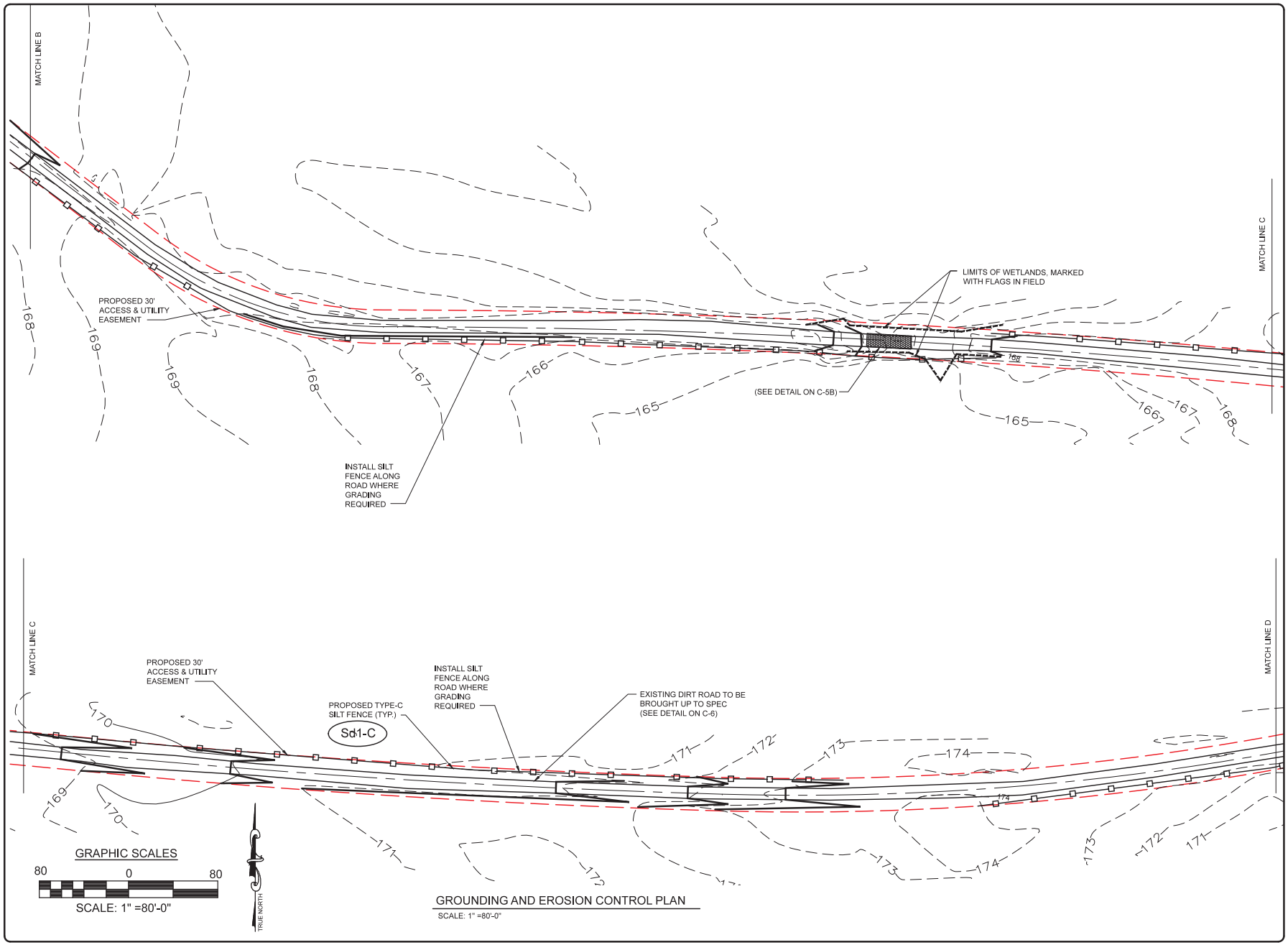

GROUNDING AND EROSION CONTROL PLAN

SCALE: 1" =80'-0"

TOWER OWNER:

AMERICAN TOWER

DEVELOPER:

TELECOM DEVELOPMENT SERVICES LLC

A&E FIRM:

TOWERSOURCE
1875 OLD ALABAMA ROAD, SUITE 1008
ROSWELL, GA 30076
TEL 678-990-2338
FAX 678-990-2342
ENGINEER: ELIZABETH B. USHER

THE INFORMATION CONTAINED IN THIS SET OF DOCUMENTS IS PROPRIETARY BY NATURE. ANY USE OR DISCLOSURE OTHER THAN THAT WHICH RELATES TO THE CLIENT IS STRICTLY PROHIBITED.

A&E PROJECT #:	–
DRAWN BY:	WCG
CHECKED BY:	EBU

REVISIONS

NO.	DATE	DESCRIPTION
A	06/24/15	ISSUED FOR REVIEW
0	07/15/15	ISSUED FOR CONSTRUCTION
1	10/1/15	ISSUED FOR CONSTRUCTION

GEORGIA REGISTERED PROFESSIONAL ENGINEER No. PE021010 ELIZABETH B. USHER 9-8-16

SITE NAME:

PCT SE PAPER GA

TOWER OWNER / SITE NUMBER:

AMERICAN TOWER

DESIGN TYPE:

GREENFIELD

SHEET TITLE:

GRADING & EROSION CONTROL PLAN

DRAWING NO.: C5D

REVISION NO.: 1

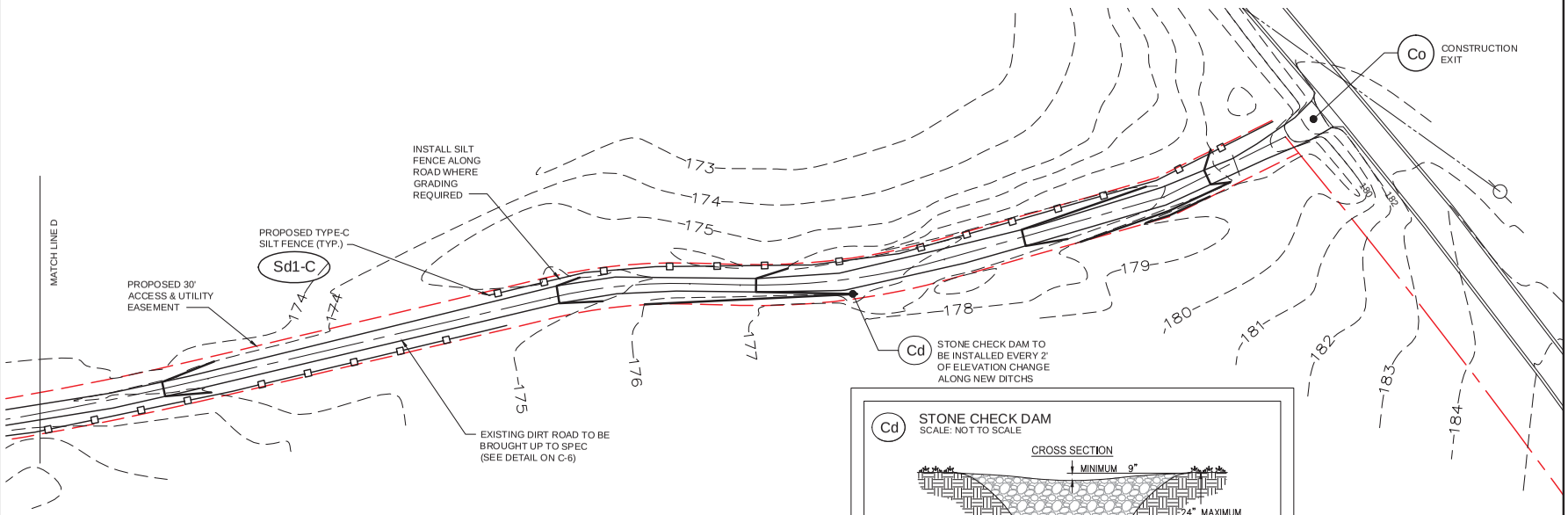

GROUNDING AND EROSION CONTROL PLAN

SCALE: 1" =80'-0"

GRAPHIC SCALES

80 0 80

SCALE: 1" =80'-0"

Cd STONE CHECK DAM

SCALE: NOT TO SCALE

CROSS SECTION

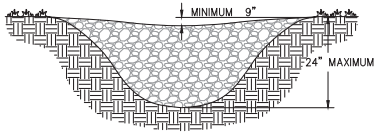

PROFILE VIEW

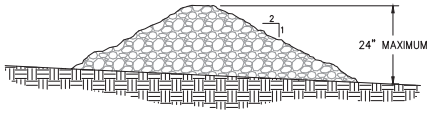

NOTES:

1. CHECK DAMS ARE TO BE USED ONLY IN SMALL OPEN CHANNELS (THEY ARE NOT TO BE USED IN LIVE STREAMS).
2. THE DRAINAGE AREA FOR STONE CHECK DAMS SHALL NOT EXCEED TWO ACRES.
3. THE CENTER OF THE CHECK DAM MUST BE AT LEAST 9 INCHES LOWER THAN THE OUTER EDGES.
4. THE DAM HEIGHT SHOULD BE A MAXIMUM OF 2 FEET FROM CENTER TO RIM EDGE.
5. THE SIDE SLOPES OF THE CHECK DAM SHALL NOT EXCEED A 2:1 SLOPE.
6. GEOTEXTILE SHALL BE USED TO PREVENT THE MITIGATION OF SUBGRADE SOIL PARTICLES INTO THE STONES (REFER TO AASHTO M288-96, SECTION 7.3, TABLE 3).

SPACING BETWEEN CHECK DAMS

A = THE TOE OF THE UPSTREAM CHECK DAM.
B = TOP OF THE DOWNSTREAM CHECK DAM.
L= THE DISTANCE SUCH THAT POINTS A AND B ARE OF EQUAL ELEVATION.

TOWER OWNER:

AMERICAN TOWER

DEVELOPER:

TELECOM DEVELOPMENT SERVICES LLC

A&E FIRM:
POWERSOURCE
1875 OLD ALABAMA ROAD, SUITE 1008
ROSWELL, GA 30076
TEL 678-990-2338
FAX 678-990-2342
ENGINEER: ELIZABETH B. USHER

THE INFORMATION CONTAINED IN THIS SET OF DOCUMENTS IS PROPRIETARY BY NATURE. ANY USE OR DISCLOSURE OTHER THAN THAT WHICH RELATES TO THE CLIENT IS STRICTLY PROHIBITED.

A&E PROJECT #:	--
DRAWN BY:	WCG
CHECKED BY:	EBU

REVISIONS

NO.	DATE	DESCRIPTION
A	06/24/15	ISSUED FOR REVIEW
0	07/15/15	ISSUED FOR CONSTRUCTION
1	10/1/15	ISSUED FOR CONSTRUCTION

SITE NAME:

PCT SE PAPER GA

TOWER OWNER / SITE NUMBER:

AMERICAN TOWER

DESIGN TYPE:

GREENFIELD

SHEET TITLE:

GRADING & EROSION CONTROL PLAN

DRAWING NO. C5E

REVISION NO. 1

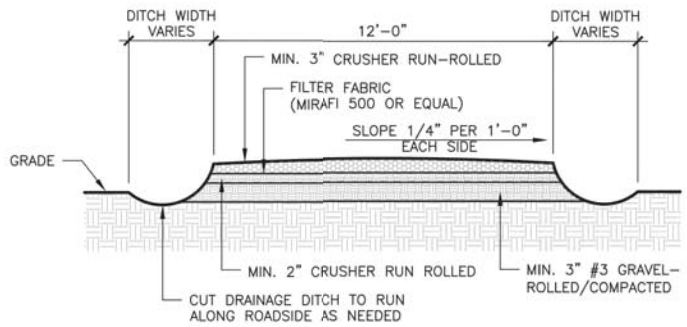

ACCESS ROAD DETAIL

SCALE: N.T.S.

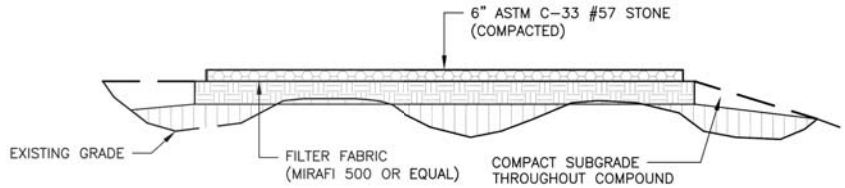

COMPOUND DETAIL

SCALE: N.T.S.

TOWER OWNER:

AMERICAN TOWER

DEVELOPER:

TELECOM DEVELOPMENT SERVICES LLC

A&E FIRM:

TOWERSOURCE
1875 OLD ALABAMA ROAD, SUITE 1008
ROSWELL, GA 30076
TEL 678-990-2338
FAX 678-990-2342
ENGINEER: ELIZABETH B. USHER

THE INFORMATION CONTAINED IN THIS SET OF DOCUMENTS IS PROPRIETARY BY NATURE. ANY USE OR DISCLOSURE OTHER THAN THAT WHICH RELATES TO THE CLIENT IS STRICTLY PROHIBITED.

A&E PROJECT #:	--
DRAWN BY:	WCG
CHECKED BY:	EBU

REVISIONS

NO.	DATE	DESCRIPTION
A	06/24/15	ISSUED FOR REVIEW
0	07/15/15	ISSUED FOR CONSTRUCTION
1	10/1/15	ISSUED FOR CONSTRUCTION

SITE NAME:

PCT SE PAPER GA

TOWER OWNER / SITE NUMBER:

AMERICAN TOWER

DESIGN TYPE:

GREENFIELD

SHEET TITLE:

ROAD PROFILE DETAILS

DRAWING NO.	REVISION NO.
C6	1

MAINTENANCE NOTES:

Southeast Paper Maintenance Plan:

3 months after the construction completion a comprehensive follow-up visit and inspection will be required. Once the inspection occurs notification to the PE of the completion of the inspection is required. If any of the issues outlined below are identified as a concern then the PE is required to address mitigation of issues.

1. Inspect disturbed areas and inspect for compaction issues which alter the contour as specified in the design.

2. Re-apply DS3 (permanent seeding) to all disturbed areas where initial application was not successful or signs of de-stabilization appear.

3. Inspect road to verify that there is no erosion within the road. Insure gravel on road has not eroded or become displaced. If gravel has eroded or become displaced identify if it has created issues with any of the ditches, inlets or other improvements.

Once the inspection is completed provide notice to the PE that the inspection is complete and provide details (if any) where issues have been identified or if there are any on site condition or variances to the site design. If any of the issues outlined below are identified as a concern then notification of the PE is required to address mitigation of issues.

After initial inspection and in subsequent intervals not to exceed 6 months* a follow up visit will be required.

1. Inspect road to verify that there is no erosion or displacement within the road.

2. Apply DS3 (permanent seeding) to all disturbed areas not otherwise stabilized.

3. Inspect for encroachment of vegetation to the improvements and eliminate potential impact due to shedding of foliage or root displacement.

* With regard to the timing of the follow-up sits visits it is highly recommended one of the inspection be scheduled the first week of November. The site is surrounded by deciduous trees and blockages are at highest risk during the period just after the leaves drop.

TOWER OWNER:

AMERICAN TOWER

DEVELOPER:

TELECOM DEVELOPMENT SERVICES LLC

A&E FIRM:

TOWERSOURCE

1875 OLD ALABAMA ROAD, SUITE 1008
ROSWELL, GA 30076
TEL 678-990-2338
FAX 678-990-2342
ENGINEER: ELIZABETH B. USHER

THE INFORMATION CONTAINED IN THIS SET OF DOCUMENTS IS PROPRIETARY BY NATURE. ANY USE OR DISCLOSURE OTHER THAN THAT WHICH RELATES TO THE CLIENT IS STRICTLY PROHIBITED.

A&E PROJECT #:	--
DRAWN BY:	WCG
CHECKED BY:	EBU

REVISIONS

NO.	DATE	DESCRIPTION
A	06/24/15	ISSUED FOR REVIEW
0	07/15/15	ISSUED FOR CONSTRUCTION
1	10/1/15	ISSUED FOR CONSTRUCTION

GEORGIA REGISTERED PROFESSIONAL ENGINEER No. PE021010 ELIZABETH B. USHER

10-6-15

SITE NAME:

PCT SE PAPER GA

TOWER OWNER / SITE NUMBER:

AMERICAN TOWER

DESIGN TYPE:

GREENFIELD

SHEET TITLE:

MAINTENANCE NOTES

DRAWING NO. C7

REVISION NO. 1

EXCAVATION & GRADING NOTES:

1. ALL EXCAVATIONS ON WHICH CONCRETE IS TO BE PLACED SHALL BE SUBSTANTIALLY HORIZONTAL ON UNDISTURBED AND UNFROZEN SOIL AND BE FREE FROM LOOSE MATERIAL AND EXCESS GROUNDWATER. DEWATERING FOR EXCESS GROUNDWATER SHALL BE PROVIDED IF REQUIRED.

2. CONCRETE FOUNDATIONS SHALL NOT BE PLACED ON ORGANIC MATERIAL. IF SOUND SOIL IS NOT REACHED AT THE DESIGNATED EXCAVATION DEPTH, THE UNSATISFACTORY SOIL SHALL BE EXCAVATED TO ITS FULL DEPTH AND EITHER BE REPLACED WITH MECHANICALLY COMPACTED GRANULAR MATERIAL OR THE EXCAVATION BE FILLED WITH CONCRETE OF THE SAME QUALITY SPECIFIED FOR THE FOUNDATION.

3. ANY EXCAVATION OVER THE REQUIRED DEPTH SHALL BE FILLED WITH EITHER MECHANICALLY COMPACTED GRANULAR MATERIAL OR CONCRETE OF THE SAME QUALITY SPECIFIED FOR THE FOUNDATION. CRUSHED STONE MAY BE USED TO STABILIZE THE BOTTOM OF THE EXCAVATION. STONE, IF USED, SHALL NOT BE USED AS COMPILING CONCRETE THICKNESS.

4. AFTER COMPLETION OF THE FOUNDATION AND OTHER CONSTRUCTION BELOW GRADE, AND BEFORE BACKFILLING, ALL EXCAVATIONS SHALL BE CLEAN OF UNSUITABLE MATERIAL SUCH AS VEGETATION, TRASH, DEBRIS, AND SO FORTH.

5. BACKFILLING SHALL:
   - -USE APPROVED MATERIALS CONSISTING OF EARTH, LOAM, SANDY CLAY, SAND AND GRAVEL, OR SOFT SHALE;
   - -BE FREE FROM CLODS OR STONES OVER 2-1/2" MAXIMUM DIMENSIONS
   - -BE PLACED IN 6" LAYERS AND COMPACTED TO 95% STANDARD PROCTOR EXCEPT IN GRASSED/LANDSCAPED AREAS, WHERE 90% STANDARD PROCTOR IS REQUIRED.

6. FILL PREPARATION:
   REMOVE ALL VEGETATION, TOPSOIL, DEBRIS, WET AND UNSATISFACTORY SOIL MATERIALS, OBSTRUCTIONS, AND DELETERIOUS MATERIALS FROM GROUND SURFACE PRIOR TO PLACING FILLS. PLOW, STRIP, OR BREAK UP SLOPED SURFACES STEEPER THAN THAN 1 VERTICAL TO 4 HORIZONTAL SO FILL MATERIAL WILL BOND WITH EXISTING SURFACE. WHEN SUBGRADE OR EXISTING GROUND SURFACE TO RECEIVE FILL HAS A DENSITY LESS THAN THAT REQUIRED FOR FILL, BREAK UP GROUND SURFACE TO DEPTH REQUIRED, PULVERIZE, MOISTURE-CONDITION OR AERATE SOIL AND RECOMPACT TO REQUIRED DENSITY.

7. PROTECT EXISTING GRAVEL SURFACING AND SUBGRADE IN AREAS WHERE EQUIPMENT LOADS WILL OPERATE. USE PLANKING OR OTHER SUITABLE MATERIALS DESIGNED TO SPREAD EQUIPMENT LOADS. REPAIR DAMAGE TO EXISTING GRAVEL SURFACING OR SUBGRADE WHERE SUCH DAMAGE IS DUE TO THE CONTRACTOR'S OPERATIONS. DAMAGED GRAVEL SURFACING SHALL BE RESTORED TO MATCH THE ADJACENT UNDAMAGED GRAVEL SURFACING AND SHALL BE OF THE SAME THICKNESS.

8. REPLACE EXISTING GRAVEL SURFACING ON AREAS FROM WHICH GRAVEL SURFACING IS REMOVED DURING CONSTRUCTION OPERATIONS. GRAVEL SURFACING SHALL BE REPLACED TO MATCH EXISTING ADJACENT GRAVEL SURFACING AND SHALL BE OF THE SAME THICKNESS. SURFACES OF GRAVEL SURFACING SHALL BE FREE FROM CORRUGATIONS AND WAVES. EXISTING GRAVEL SURFACING MAY BE EXCAVATED SEPARATELY AND REUSED IF INJURIOUS AMOUNTS OF EARTH, ORGANIC MATTER, OR OTHER DELETERIOUS MATERIALS ARE REMOVED PRIOR TO REUSE. FURNISH ALL ADDITIONAL GRAVEL RESURFACING MATERIAL AS REQUIRED. BEFORE GRAVEL SURFACING IS REPLACED, SUBGRADE SHALL BE GRADED TO CONFORM TO REQUIRED SUBGRADE ELEVATIONS, AND LOOSE OR DISTURBED MATERIALS SHALL BE THOROUGHLY COMPACTED. DEPRESSIONS IN THE SUBGRADE SHALL BE FILLED AND COMPACTED WITH APPROVED SELECTED MATERIAL. GRAVEL SURFACING MATERIAL MAY BE USED FOR FILLING DEPRESSIONS IN THE SUBGRADE, SUBJECT TO ENGINEER'S APPROVAL.

9. DAMAGE TO EXISTING STRUCTURES AND UTILITIES RESULTING FROM CONTRACTOR'S NEGLIGENCE SHALL BE REPAIRED / REPLACED TO OWNER'S SATISFACTION AT CONTRACTOR'S EXPENSE.

10. CONTRACTOR SHALL COORDINATE THE CONSTRUCTION SCHEDULE WITH PROPERTY OWNER SO AS TO AVOID INTERRUPTIONS TO PROPERTY OWNER'S OPERATIONS.

11. ENSURE POSITIVE DRAINAGE DURING AND AFTER COMPLETION OF CONSTRUCTION.

12. ALL CUT AND FILL SLOPES SHALL BE 2 HORIZONTAL TO 1 VERTICAL MAXIMUM.

13. REMOVE ALL ORGANICS, ROCKS GREATER THAN 3", UNUSED FILL AND OTHER DEBRIS TO AN AREA OFF SITE IN A LEGAL MANNER.

Ds1 DISTURBED AREA STABILIZATION (WITH MULCHING ONLY)
NO SCALE

Ds2 DISTURBED AREA STABILIZATION (WITH TEMPORARY SEEDING)
NO SCALE

Ds3 DISTURBED AREA STABILIZATION (WITH PERMANENT VEGETATION)
NO SCALE

ACTIVITY SCHEDULE	
WORK DESCRIPTION	WORKING DAYS
INSTALLATION OF EROSION CONTROL MEASURES	1-2
CLEARING, GRUBBING, AND GRADING	3-5
MAINTAINING EROSION CONTROL MEASURES	6-8
TEMPORARY GRASSING	9-12
BUILDING CONSTRUCTION	13-19
FINAL LANDSCAPING, GRASSING	20-23
REMOVING EROSION CONTROL MEASURES	24-26

THE INSTALLATION OF EROSION CONTROL MEASURES AND PRACTICES SHALL TAKE PLACE PRIOR TO OR CONCURRENT WITH LAND DISTURBING ACTIVITIES.

GENERAL EROSION & SEDIMENT CONTROL NOTES:

1. ADDITIONAL EROSION CONTROL MEASURES WILL BE EMPLOYED WHERE DETERMINED NECESSARY BY ACTUAL SITE CONDITIONS.
2. PRIOR TO COMMENCING LAND DISTURBANCE ACTIVITY, THE LIMITS OF LAND DISTURBANCE SHALL BE CLEARLY AND ACCURATELY DEMARCATED WITH STAKES, RIBBONS, OR OTHER APPROPRIATE MEANS.
3. THE CONSTRUCTION OF THE SITE WILL INITIATE WITH THE INSTALLATION OF EROSION CONTROL MEASURES SUFFICIENT TO CONTROL SEDIMENT DEPOSITS AND EROSION.
   CONTRACTOR SHALL CALL APPROPRIATE COUNTY FOR AN INSPECTION OF SOIL EROSION CONTROL MEASURES PRIOR TO BEGINNING GRADING ACTIVITY.
   ALL SEDIMENT CONTROL WILL BE MAINTAINED UNTIL ALL UPSTREAM GROUND WITHIN THE CONSTRUCTION AREA HAS BEEN COMPLETELY STABILIZED.
4. THE LOCATION OF SOME OF THE EROSION CONTROL DEVICES MAY HAVE TO BE ALTERED FROM THAT SHOWN ON THE PLANS IF DRAINAGE PATTERNS DURING CONSTRUCTION ARE DIFFERENT FROM THE FINAL PROPOSED DRAINAGE PATTERNS. ANY DIFFICULTY IN CONTROLLING EROSION DURING ANY PHASE OF CONSTRUCTION SHALL BE REPORTED TO THE ENGINEER IMMEDIATELY.
5. EROSION CONTROL MEASURES WILL BE MAINTAINED AT ALL TIMES. IF FULL IMPLEMENTATION OF THE APPROVED PLAN DOES NOT PROVIDE FOR ELECTIVE EROSION CONTROL, ADDITIONAL EROSION AND SEDIMENT CONTROL MEASURES SHALL BE IMPLEMENTED TO CONTROL OR TREAT THE SEDIMENT SOURCE.
6. THE CONTRACTOR SHALL REMOVE ACCUMULATED SILT WHEN THE SILT IS WITHIN 12" OF THE TOP OF THE SILT FENCE.
7. FAILURE TO INSTALL, OPERATE OR MAINTAIN ALL EROSION CONTROL MEASURES WILL RESULT IN ALL CONSTRUCTION BEING STOPPED ON THE JOB SITE UNTIL SUCH MEASURES ARE CORRECTED.
8. SILT BARRIERS TO BE PLACED AT DOWNSTREAM TOE OF ALL CUT AND FILL SLOPES.
9. ANY DISTURBED AREA LEFT EXPOSED FOR A PERIOD GREATER THAN 7 DAYS SHALL BE STABILIZED WITH SEEDING.
10. SEEDING:

A. SEEDING WITH MULCH (CONVENTIONAL SEEDING ON SLOPES LESS THAN 3:1)
(HYDRAULIC SEEDING EQUIPMENT ON SLOPES 3:1 AND STEEPER)

AGRICULTURAL LIMESTONE	4000 LBS./acre
FERTILIZER. 5-10-15	1500 lbs./acre
MULCH STRAW OR HAY	5000 lbs./arce

SEED SPECIES	APPLICATION RATE/ACRE	PLANNING DATES
HULLED COMMON BERMUDA GRASS	10lbs.	3/1 - 6/15
FESCUE	50lbs.	9/1 -10/31
FESCUE RYE GRASS	50lbs. 50lbs.	11/1 -2/28
HAY MULCH FOR TEMPORARY COVER	5000lbs.	6/15 -8/31

B. TOPDRESSING: APPLY WHEN PLANTS ARE 2 TO 4 INCHES TALL
FERTILIZER (AMMONIUM NITRATE 33.5%) 300 lbs./acre

C. SECOND-YEAR-FERTILIZER: (5-10-15 OR EQUIVALENT) 800 lbs./acre

HYDRAULIC SEEDING EQUIPMENT
WHEN HYDRAULIC SEEDING AND FERTILIZING EQUIPMENT IS USED, NO GRADING AND SHAPING OR SEEDBED PREPARATION WILL BE REQUIRED. THE FERTILIZER, SEED AND WOOD CELLULOSE FIBER MULCH WILL BE MIXED WITH WATER AND APPLIED IN A SLURRY. ALL SLURRY INGREDIENTS MUST BE COMBINED TO FORM A HOMOGENEOUS MIXTURE, AND SPREAD UNIFORMLY OVER THE AREA WITHIN ONE HOUR AFTER MIXTURE IS MADE. STRAW OR HAY MULCH AND ASPHALT EMULSION WILL BE APPLIED WITH BLOWER-TYPE MULCH SPREADING EQUIPMENT WITHIN 24 HOURS AFTER SEEDING, THE MULCH WILL BE SPREAD UNIFORMLY OVER THE AREA, LEAVING ABOUT 25 PERCENT OF THE GROUND SURFACE EXPOSED.

CONVENTIONAL SEEDING EQUIPMENT
GRADE, SHAPE AND SMOOTH WHERE NEEDED TO PROVIDE FOR SAFE EQUIPMENT OPERATION AT SEEDING TIME AND FOR MAINTENANCE PURPOSES. THE LIME AND FERTILIZER IN DRY FORM WILL BE SPREAD UNIFORMLY OVER THE AREA IMMEDIATELY BEFORE SEEDBED PREPARATION. A SEEDBED WILL BE PREPARED BY SCARIFYING TO A DEPTH OF 1 TO 4 INCHES AS DETERMINED ON SITE. THE SEEDBED MUST BE WELL PULVERIZED, SMOOTHED AND FIRMED. SEEDING WILL BE DONE WITH CULTIPACKER-SEEDER, DRILL, ROTARY SEEDER OR OTHER MECHANICAL OR HAND SEEDER. SEED WILL BE DISTRIBUTED UNIFORMLY OVER A FRESHLY PREPARED SEEDBED AND COVERED LIGHTLY. WITHIN 24 HOURS AFTER SEEDING, STRAW OR HAY MULCH WILL BE SPREAD UNIFORMLY OVER THE AREA, LEAVING ABOUT 25 PERCENT OF THE GROUND SURFACE EXPOSED. MULCH WILL BE SPREAD WITH BLOWER-TYPE MULCH EQUIPMENT OR BY HAND AND ANCHORED IMMEDIATELY AFTER IT IS SPREAD. A DISK HARROW WITH THE DISK SET STRAIGHT OR A SPECIAL PACKER DISK MAY BE USED TO PRESS THE MULCH INTO THE SOIL.

11. CONTRACTOR SHALL REMOVE ALL EROSION & SEDIMENT CONTROL MEASURES AFTER COMPLETION OF CONSTRUCTION AND ESTABLISHMENT OF PERMANENT GROUND COVER.
12. THE ESCAPE OF SEDIMENT FROM THE SITE SHALL BE PREVENTED BY THE INSTALLATION OF EROSION CONTROL MEASURES AND PRACTICES PRIOR TO, OR CONCURRENT WITH, LAND-DISTURBING ACTIVITIES.
13. ALL CUT AND FILL SLOPES MUST BE SURFACED ROUGHENED AND VEGETATED WITHIN SEVEN (7) DAYS OF THEIR CONSTRUCTION.
14. ALL FILL SLOPES WILL HAVE SILT FENCE AT TOE OF SLOPES.
15. ALL SEDIMENT AND EROSION CONTROL MEASURES WILL BE CHECKED DAILY AND ANY DEFICIENCIES NOTED WILL BE CORRECTED BY THE END OF EACH DAY. ADDITIONAL EROSION AND SEDIMENT CONTROL MEASURES WILL BE INSTALLED IF DEEMED NECESSARY AFTER ON-SITE INSPECTION BY THE ISSUING AUTHORITY.
16. THE ONLY MATERIAL TO BE BURIED ON-SITE IS VEGETATIVE MATERIAL. CONSTRUCTION WASTE MAY NEITHER BE BURNED NOR BURIED AND MUST BE TAKEN TO A STATE APPROVED LANDFILL.
17. A 25' MIN UNDISTURBED VEGETATIVE BUFFER ADJACENT TO ALL RUNNING STREAMS AND CREEKS WILL BE LEFT AND MAINTAINED.

TOWER OWNER:
AMERICAN TOWER

DEVELOPER:
TELECOM DEVELOPMENT SERVICES LLC

A&E FIRM:
TOWERSOURCE
1875 OLD ALABAMA ROAD, SUITE 1008
ROSWELL, GA 30076
TEL 678-990-2338
FAX 678-990-2342
ENGINEER: ELIZABETH B. USHER

THE INFORMATION CONTAINED IN THIS SET OF DOCUMENTS IS PROPRIETARY BY NATURE. ANY USE OR DISCLOSURE OTHER THAN THAT WHICH RELATES TO THE CLIENT IS STRICTLY PROHIBITED.

A&E PROJECT #:	--
DRAWN BY:	WCG
CHECKED BY:	EBU

REVISIONS

NO.	DATE	DESCRIPTION
A	06/24/15	ISSUED FOR REVIEW
0	07/15/15	ISSUED FOR CONSTRUCTION
1	10/1/15	ISSUED FOR CONSTRUCTION

SITE NAME:
PCT SE PAPER GA

TOWER OWNER / SITE NUMBER:
AMERICAN TOWER

DESIGN TYPE:
GREENFIELD

SHEET TITLE:
GRADING & SEDIMENT CONTROL NOTES

DRAWING NO. C8
REVISION NO. 1

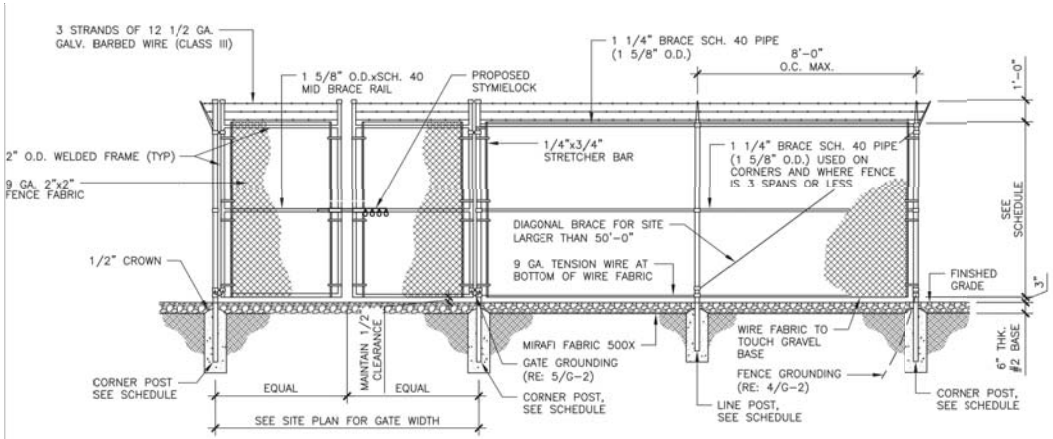

TYPICAL FENCING SIZES		
8' HIGH FENCE	SIZE	POST FOOTING
LINE POST	2 3/8"ø	12"ø x 30" DP.
CORNER POST	3"ø	12"ø x 42" DP.
GATE POST	4"ø	12"ø x 42" DP.

FENCE DETAIL

SCALE: N.T.S.

STYMIE SECURITY LOCK
STANDARD GALVANIZED 2" LOCK SYSTEM WELDED TO GATE CROSS SUPPORTS 4-2" SLEEVES WITH SLOTTED HASPS. ACQUIRE FROM: EAKER CONSTRUCTION JOHN EAKER: (704) 617-0792 (888) 278-9643

GATE SIGNAGE
CONTRACTOR TO INSTALL ATC SIGNAGE TO THE NEWLY INSTALLED ACCESS GATE. SIGNAGE TO BE INSTALLED USING GALVANIZED METAL SCREWS IN 4 PLACES. NO PLASTIC WIRE TIES WILL BE USED.

GATE DETAIL
PANELS TO BE 4'Hx8'W GALVANIZED TUBULAR STELL 2" O.D.x16 GAUGE HIGH TENSILE WELDED STEEL. HEAVY DUTY MOUNT HARDWARE TO BE WELDED TO THE SUPPORT POSTS.

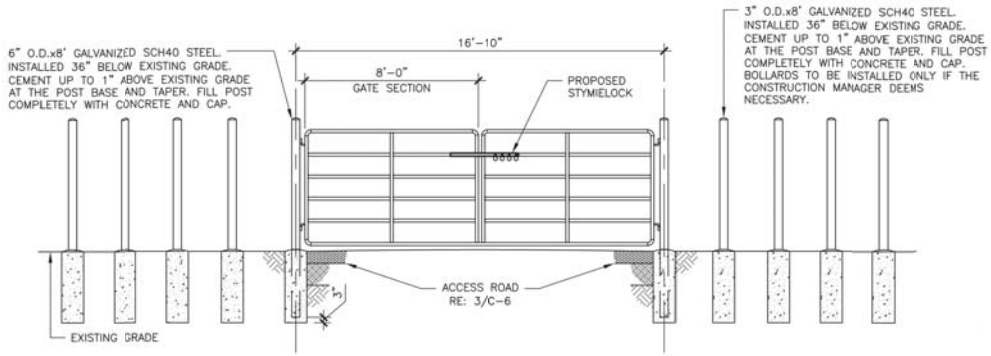

GATE DETAIL

SCALE: N.T.S.

TOWER OWNER:

AMERICAN TOWER

DEVELOPER:

TELECOM DEVELOPMENT SERVICES LLC

A&E FIRM:

POWERSOURCE
1875 OLD ALABAMA ROAD, SUITE 1008
ROSWELL, GA 30076
TEL 678-990-2338
FAX 678-990-2342
ENGINEER: ELIZABETH B. USHER

THE INFORMATION CONTAINED IN THIS SET OF DOCUMENTS IS PROPRIETARY BY NATURE. ANY USE OR DISCLOSURE OTHER THAN THAT WHICH RELATES TO THE CLIENT IS STRICTLY PROHIBITED.

A&E PROJECT #:	--
DRAWN BY:	WCG
CHECKED BY:	EBU

REVISIONS

NO.	DATE	DESCRIPTION
A	06/24/15	ISSUED FOR REVIEW
0	07/15/15	ISSUED FOR CONSTRUCTION
1	10/1/15	ISSUED FOR CONSTRUCTION

SITE NAME:

PCT SE PAPER GA

TOWER OWNER / SITE NUMBER:

AMERICAN TOWER

DESIGN TYPE:

GREENFIELD

SHEET TITLE:

FENCE DETAILS

DRAWING NO.	REVISION NO.
C9	1

GENERAL NOTES

1. SCOPE:
   PROVIDE LABOR, EQUIPMENT, MATERIALS, ETC., REQUIRED TO COMPLETE THE INSTALLATION SHOWN.

2. CODES AND STANDARDS:
   INSTALLATION SHALL COMPLY WITH APPLICABLE LAWS AND ORDINANCES, UTILITY COMPANY REGULATIONS, & APPLICABLE REQUIREMENTS OF LATEST EDITIONS OF:
   - NFC - NATIONAL FIRE CODE
   - UL - UNDERWRITERS LABORATORIES
   - NEC - NATIONAL ELECTRICAL CODE
   - NEMA - NATIONAL ELECTRICAL MANUFACTURERS ASSOCIATION
   - OSHA - OCCUPATIONAL SAFETY & HEALTH ACT
   - SBC - STANDARD BUILDING CODE

3. PERMITS:
   OBTAIN & PAY FOR REQUIRED PERMITS, LICENSES, FEES, INSPECTIONS, ETC..

4. COORDINATION:
   COORDINATE WORK WITH OTHER TRADES.

5. SUBMITTALS:
   SUBMIT BROCHURES FOR APPROVAL ON DISCONNECT SWITCH & OTHER MAJOR SYSTEM COMPONENTS.

6. EXISTING SERVICES:
   DO NOT INTERRUPT EXISTING SERVICES WITHOUT WRITTEN PERMISSION OF THE OWNER.

7. EQUIPMENT:
   CONNECT ELECTRICALLY OPERATED EQUIPMENT.

8. RECORD DRAWINGS:
   MAINTAIN A RECORD OF ALL CHANGES, SUBSTITUTIONS BETWEEN WORK AS SPECIFIED AND INSTALLED. RECORD CHANGES ON A CLEAN SET OF CONTRACT DOCUMENTS WHICH SHALL BE TURNED OVER TO THE OWNER UPON COMPLETION OF THE PROJECT.

9. IDENTIFICATION:
   IDENTIFY DISCONNECT SWITCH WITH PERMANENT ENGRAVED NAMEPLATE.

10. GUARANTEE/WARRANTY:
    GUARANTEE INSTALLATION TO BE FREE OF DEFECTS, SHORTS, GROUNDS. ETC., FOR A PERIOD OF ONE YEAR. FURNISH WARRANTY SO THE DEFECTIVE MATERIALS AND/OR WORKMANSHIP WILL BE REPAIRED/ REPLACED IMMEDIATELY UPON NOTIFICATION AT NO COST TO THE OWNER FOR PERIOD OF WARRANTY.

11. CUTTING & PATCHING:
    PROVIDE CUTTING REQUIRED TO DO THE WORK. DO NOT CUT STRUCTURAL ELEMENTS WITHOUT APPROVAL. PATCHING SHALL BE OF QUALITY EQUAL TO & OF MATCHING APPEARANCE OF EXISTING CONSTRUCTION.

12. TRENCHING & BACKFILL:
    PROVIDE FOR ALL UNDERGROUND INSTALLED CONDUIT AND/OR CABLES.

13. RACEWAYS:
    UNDERGROUND CONDUIT SHALL BE SCHEDULE 40 PVC CONDUIT (MEETING NEMA TC2-1990). UNDERGROUND PVC CONDUIT SHALL TRANSITION TO RIGID GALVANIZED STEEL CONDUIT BEFORE RISING ABOVE GRADE OR WHEN SUBJECTED TO VEHICLE TRAFFIC LOADS. ALL CONDUIT BENDS SHALL BE A MINIMUM OF 24" RADIUS. EXPOSED CONDUIT SHALL BE RIGID GALVANIZED STEEL. RGS CONDUIT, WHEN SPECIFIED, SHALL MEET UL-6 FOR GALVANIZED STEEL. ALL FITTINGS SHALL BE SUITABLE FOR USE WITH THREADED RIGID CONDUIT. INTERIOR CONDUIT SHALL BE ELECTRICAL METALLIC TUBING WITH COMPRESSION TYPE FITTINGS.

14. SUPPORTS:
    AS REQUIRED BY THE NEC.

15. CONDUCTORS:
    USE 98% CONDUCTIVITY COPPER WITH TYPE THHN/THWN INSULATION, 600 VOLT, COLOR CODED. USE SOLID CONDUCTORS FOR WIRE UP TO #8 AWG. USE STRANDED CONDUCTORS FOR WIRE #8 AWG AND ABOVE.

16. CONNECTORS FOR POWER CONDUCTORS:
    USE PRESSURE TYPE INSULATED TWIST CONNECTORS FOR #10 AWG AND SMALLER. USE SOLDERLESS MECHANICAL TERMINAL LUGS FOR #8 AWG AND LARGER.

17. GROUNDING:
    - A. ALL MATERIALS SHALL BE INSTALLED PER MANUFACTURER'S RECOMMENDATIONS & INSTRUCTIONS.
    - B. ALL CONNECTIONS SHALL BE 2- HOLE LUG UNLESS UNDERGROUND.
    - C. LUGS SHALL BE ATTACHED TO GROUND BARS USING STAINLESS STEEL OR HOT-DIPPED GALVANIZED STEEL BOLTS, NUTS, & LOCKWASHERS.
    - D. PROVIDE TESTING OF GROUNDING SYSTEM AS DIRECTED BY CONSTRUCTION MANAGER.

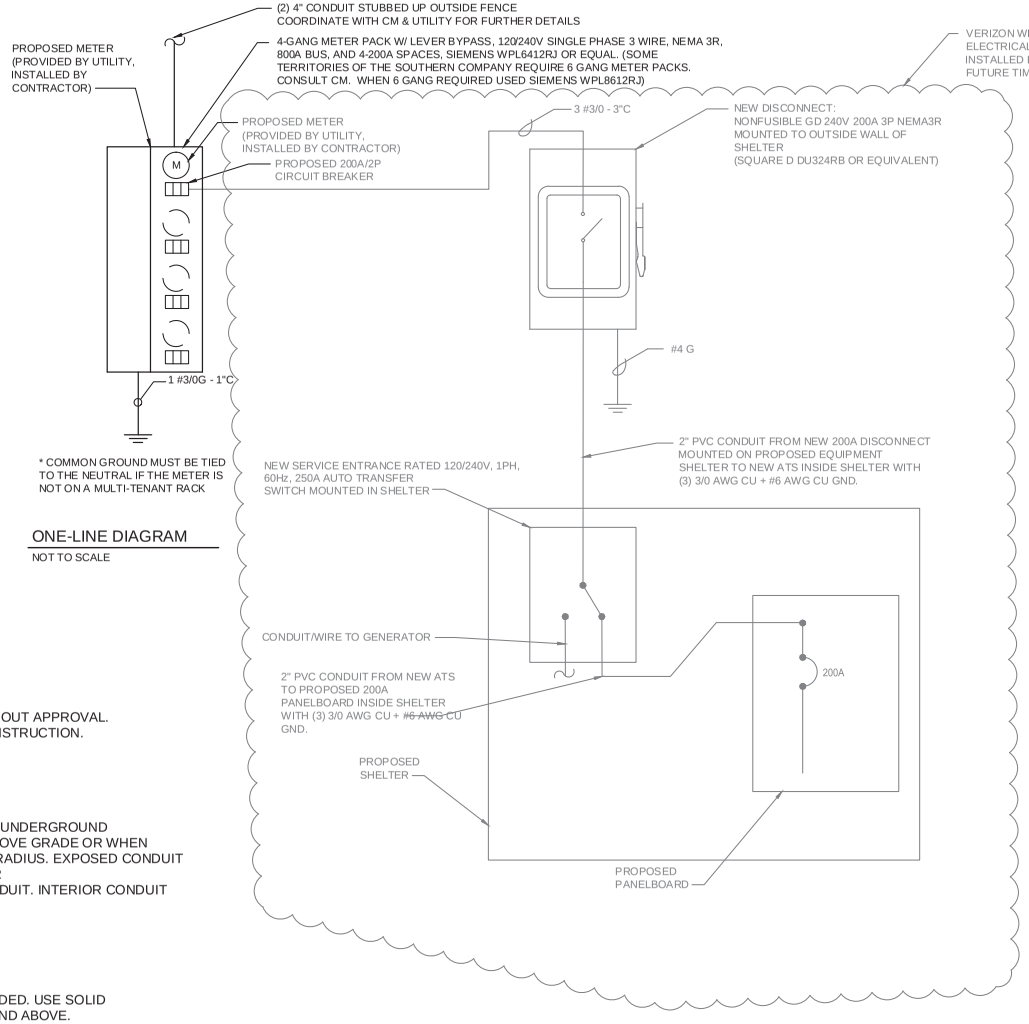

ONE-LINE DIAGRAM

NOT TO SCALE

TOWER OWNER:

AMERICAN TOWER

DEVELOPER:

TELECOM DEVELOPMENT SERVICES LLC

A&E FIRM:

POWERSOURCE
1875 OLD ALABAMA ROAD, SUITE 1008
ROSWELL, GA 30076
TEL 678-990-2338
FAX 678-990-2342
ENGINEER: ELIZABETH B. USHER

THE INFORMATION CONTAINED IN THIS SET OF DOCUMENTS IS PROPRIETARY BY NATURE. ANY USE OR DISCLOSURE OTHER THAN THAT WHICH RELATES TO THE CLIENT IS STRICTLY PROHIBITED.

A&E PROJECT #:	--
DRAWN BY:	WCG
CHECKED BY:	EBU

REVISIONS

NO.	DATE	DESCRIPTION
A	06/24/15	ISSUED FOR REVIEW
0	07/15/15	ISSUED FOR CONSTRUCTION
1	10/1/15	ISSUED FOR CONSTRUCTION

SITE NAME:

PCT SE PAPER GA

TOWER OWNER / SITE NUMBER:

AMERICAN TOWER

DESIGN TYPE:

GREENFIELD

SHEET TITLE:

ELECTRICAL NOTES & ONE-LINE DIAGRAM

DRAWING NO.	REVISION NO.
E1	1

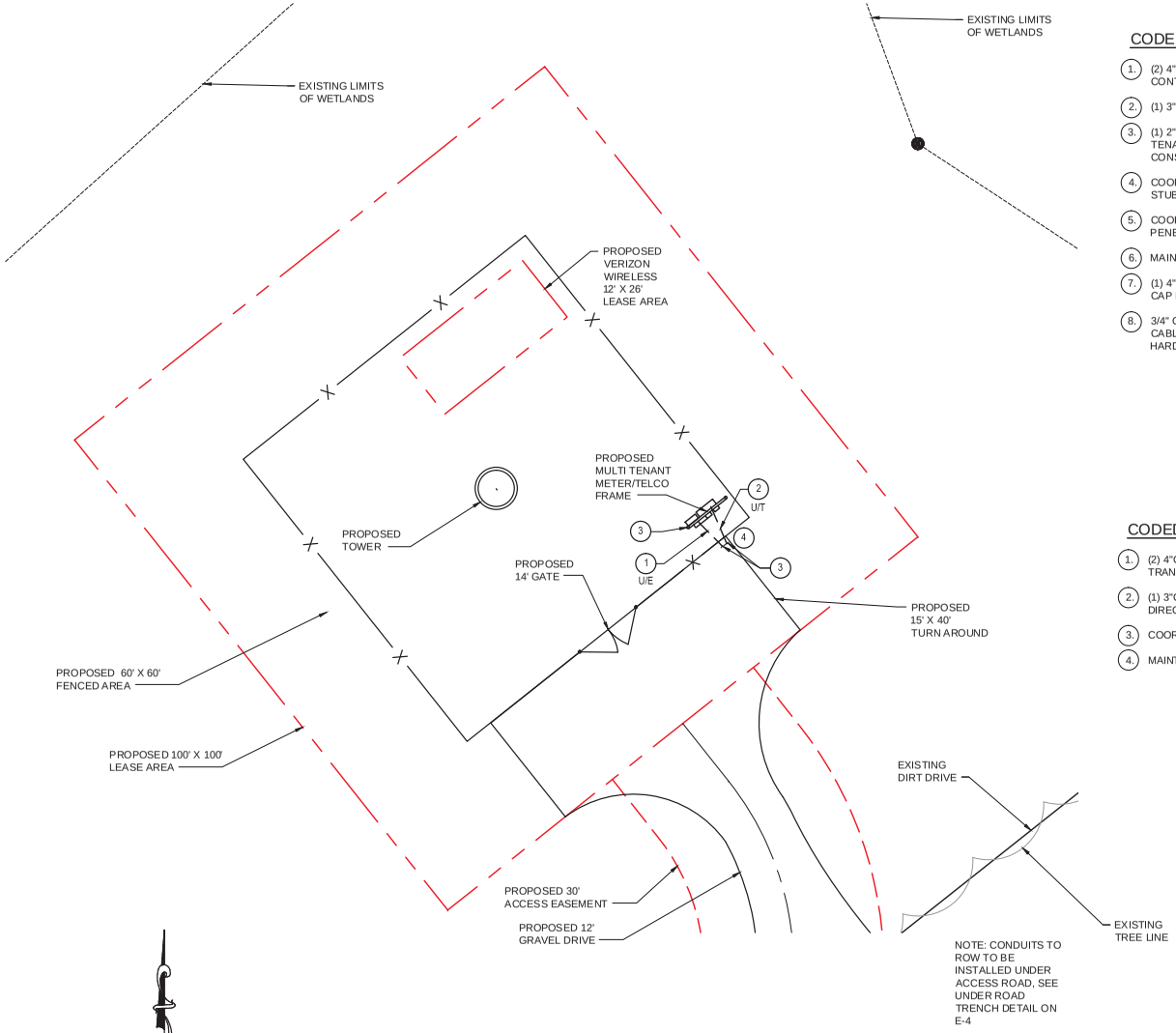

CODED DRAWING NOTES:

1. (2) 4"C FOR POWER SERVICE FROM TRANSFORMER TO MULTI TENANT FRAME; REFER TO E-1. CONTRACTOR TO COORDINATE WITH UTILITY FOR POWER DEMARC LOCATION.
2. (1) 3"C FOR POWER FROM MULTI-TENANT FRAME TO SHELTER.
3. (1) 2"C WITH PULL WIRE FOR FIBER SERVICE TO BE RAN FROM INSIDE SHELTER TO MULTI TENANT FIBER BOX OR STUBBED UP 5' OUTSIDE FENCE. CONSULT CM BEFORE STARTING CONSTRUCTION TO DETERMINE UTILITY EXACT REQUIREMENTS.
4. COORDINATE ELECTRICAL SERVICE REQUIREMENTS IN ADVANCE WITH UTILITY COMPANY. STUB UP POWER AND FIBER CONDUIT AS DIRECTED BY UTILITY COMPANY.
5. COORDINATE WITH EQUIPMENT MANUFACTURER FOR EXACT LOCATION OF CONDUIT PENETRATIONS..
6. MAINTAIN ALL NEC CLEARANCES.
7. (1) 4"C WITH PULL WIRE RUN FROM FIBER BOX ON FRAME AND STUBBED UP 5' OUTSIDE FENCE. CAP EXPOSED CONDUIT WITH WATER PROOF CAP.
8. 3/4" C FOR TOWER LIGHTING. TOWER LIGHT CONTROLLER TO BE MOUNTED INSIDE SHELTER. CABLES TO BE RUN AGAINST WAVEGUIDE LADDER AND NOT THE LEGS, SUPPORTED WITH HARDWARE, AND NOT ZIP TIES OR STRINGS.

CODED DRAWING NOTES:

1. (2) 4"C WITH PULL WIRE FOR POWER SERVICE TO BE STUBBED UP AT UTILITY POLE OR TRANSFORMER OUTSIDE FENCE AND RUN TO MULTI TENANT FRAME. REFER TO E-1.
2. (1) 3"C WITH PULL WIRE FOR FIBER SERVICE TO BE STUBBED UP 5' OUTSIDE FENCE OR AS DIRECTED BY UTILITY AND RUN TO FIBER BOX ON FRAME.
3. COORDINATE SERVICE REQUIREMENTS IN ADVANCE WITH UTILITY COMPANY.
4. MAINTAIN ALL NEC CLEARANCES

TRUE NORTH

GRAPHIC SCALES

20 0 20

SCALE: 1" = 20'-0"

ELECTRICAL PLAN

SCALE: 1" = 20'-0"

ABBREVIATIONS

AWG	AMERICAN WIRE GAUGE	PVC	POLYVINYL CHLORIDE
BFG	BELOW FINISH GRADE	RGS	RIGID GALVANIZED STEEL
C	CONDUIT	SS	STAINLESS STEEL
CAB	CABINET	SST	SELF SUPPORTING TOWER
DWG	DRAWING	TYP.	TYPICAL
G	GROUND		

TOWER OWNER:

AMERICAN TOWER

DEVELOPER:

TELECOM DEVELOPMENT SERVICES LLC

A&E FIRM:

POWERSOURCE
1875 OLD ALABAMA ROAD, SUITE 1008
ROSWELL, GA 30076
TEL 678-990-2338
FAX 678-990-2342
ENGINEER: ELIZABETH B. USHER

THE INFORMATION CONTAINED IN THIS SET OF DOCUMENTS IS PROPRIETARY BY NATURE. ANY USE OR DISCLOSURE OTHER THAN THAT WHICH RELATES TO THE CLIENT IS STRICTLY PROHIBITED.

A&E PROJECT #:	--
DRAWN BY:	WCG
CHECKED BY:	EBU

REVISIONS

NO.	DATE	DESCRIPTION
A	06/24/15	ISSUED FOR REVIEW
0	07/15/15	ISSUED FOR CONSTRUCTION
1	10/1/15	ISSUED FOR CONSTRUCTION

SITE NAME:

PCT SE PAPER GA

TOWER OWNER / SITE NUMBER:

AMERICAN TOWER

DESIGN TYPE:

GREENFIELD

SHEET TITLE:

ELECTRICAL PLAN

DRAWING NO.: E2

REVISION NO.: 1

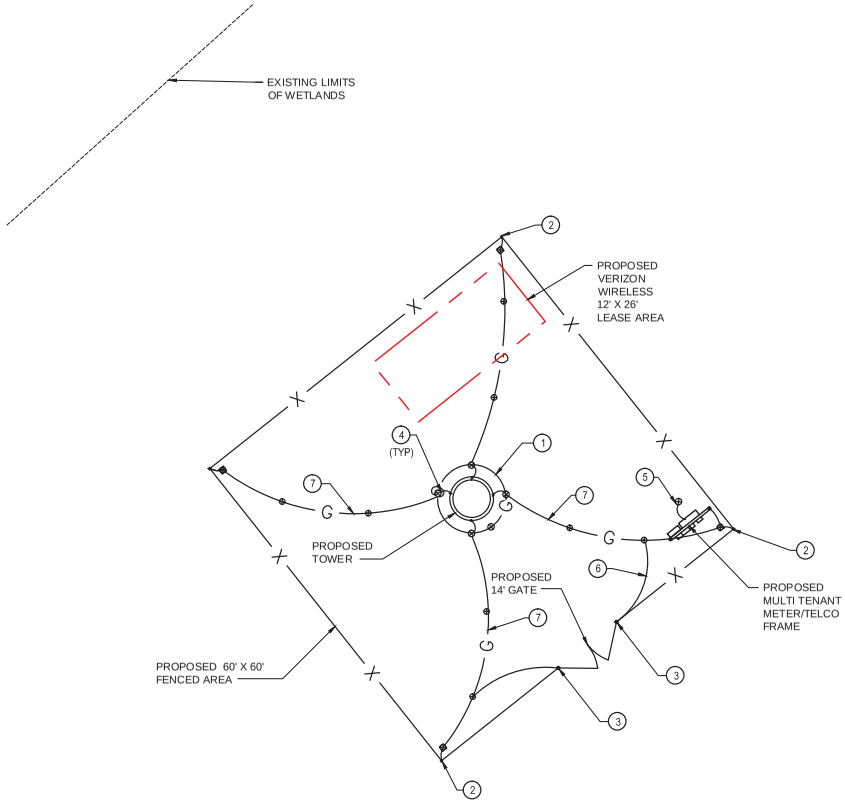

GROUNDING SITE PLAN

SCALE: 1" = 12'-0"

GENERAL GROUNDING NOTES:

1. TO ENSURE PROPER BONDING, ALL CONNECTIONS SHALL BE AS FOLLOWS:
   - 1.1. #2 TINNED SOLID COPPER WIRE: CADWELDED TO RODS OR GROUND RING
   - 1.2. LUGS AND BUS BAR (UNLESS NOTED OTHERWISE): SANDED CLEAN, COATED WITH OXIDE INHIBITOR AND BOLTED FOR MAXIMUM SURFACE CONTACT. ALL LUGS SHALL BE COPPER (NO ALUMINUM SHALL BE PERMITTED). PROVIDE LOCK WASHERS FOR ALL MECHANICAL CONNECTIONS FOR GROUND CONDUCTORS. USE STAINLESS STEEL HARDWARE THROUGHOUT.
2. ALL GROUNDING CABLE IN CONCRETE OR THROUGH WALLS SHALL BE IN 3/4" PVC CONDUIT. SEAL AROUND CONDUIT THROUGH WALLS. NO METALLIC CONDUIT SHALL BE USED FOR GROUNDING CONDUCTORS.
3. DEVELOPER'S REPRESENTATIVE WILL BE PRESENT TO INSPECT CADWELDS AND MEGGER TEST DURING BURIAL. MAXIMUM 5 OHMS RESISTANCE IS REQUIRED.
4. DO NOT INSTALL GROUND RING OUTSIDE OF LEASED AREA.
5. MAKE ALL GROUND CONNECTIONS AS SHORT AND DIRECT AS POSSIBLE. AVOID SHARP BENDS. ALL BENDS SHALL BE A MINIMUM 8" RADIUS AND NO GREATER THAN 90 DEGREES.
6. ALL CADWELDS TO BURIED GROUND RING SHALL BE THE PARALLEL TYPE, EXCEPT FOR THE GROUND RODS WHICH SHALL BE THE TEE TYPE.
7. BOND DOOR FRAMES, HANDRAILS, UNUSED HATCH PLATES AND MISCELLANEOUS LIFTING EYE/PLATES TO GROUND RING. BOND METAL AWNING TO DOOR FRAME.
8. BOND SERVICE CONDUITS TO GROUND RING AS THEY CROSS. DO NOT EXOTHERMICALLY WELD TO CONDUITS.
9. ALL BUSS BAR SHALL BE GALVANIZED. ALL CONNECTIONS TO BUSS BAR ARE TO BE 2 - HOLE LUGS.
10. ALL GROUNDING IS TO COMPLY WITH THE DEVELOPERS STANDARDS. IF YOU DO NOT HAVE A COPY OF THE PRACTICE/STANDARD PLEASE REQUEST A COPY FROM THE PROJECT MANAGER.
11. ALL EXPOSED GROUND LEADS TO BE COVERED WITH EMT (ELECTRICAL METALLIC TUBING) AND CRIMPED EVERY 4".

CODED DRAWING NOTES

1. PROVIDE #2 TINNED SOLID FOR TOWER RING BURIED AT MINIMUM 36" BELOW GRADE.
2. BOND ALL FENCE CORNER POST TO COMPOUND GROUND RING.
3. BOND GATE POST TO TOWER GROUND RING.
4. BOND TOWER TO TOWER GROUND RING (TYPICAL 3 PLACES).
5. GROUND BUSS BAR ON NEW METER TO ISOLATED GROUND ROD.
6. BOND UTILITY FRAME POST TO COMPOUND GROUND RING AT EACH LEG.
7. CONNECT TOWER GROUND RING TO COMPOUND GROUND RING.

LEGEND

- INSPECTION WELL AT GROUND CONNECTION
- CHEMICAL GROUND ROD
- GROUND ROD
- GROUND ROD WITH INSPECTION SLEEVE
- CADWELD TYPE CONNECTION
- COMPRESSION TYPE CONNECTION
- GROUND WIRE

TRUE NORTH

GRAPHIC SCALES

12 0 12

SCALE: 1" = 12'-0"

TOWER OWNER:

AMERICAN TOWER

DEVELOPER:

TELECOM DEVELOPMENT SERVICES LLC

A&E FIRM:

TOWERSOURCE
1875 OLD ALABAMA ROAD, SUITE 1008
ROSWELL, GA 30076
TEL 678-990-2338
FAX 678-990-2342
ENGINEER: ELIZABETH B. USHER

THE INFORMATION CONTAINED IN THIS SET OF DOCUMENTS IS PROPRIETARY BY NATURE. ANY USE OR DISCLOSURE OTHER THAN THAT WHICH RELATES TO THE CLIENT IS STRICTLY PROHIBITED.

A&E PROJECT #:	--
DRAWN BY:	WCG
CHECKED BY:	EBU

REVISIONS

NO.	DATE	DESCRIPTION
A	06/24/15	ISSUED FOR REVIEW
0	07/15/15	ISSUED FOR CONSTRUCTION
1	10/1/15	ISSUED FOR CONSTRUCTION

SITE NAME:

PCT SE PAPER GA

TOWER OWNER / SITE NUMBER:

AMERICAN TOWER

DESIGN TYPE:

GREENFIELD

SHEET TITLE:

GROUNDING SITE PLAN

DRAWING NO.: E3

REVISION NO.: 1

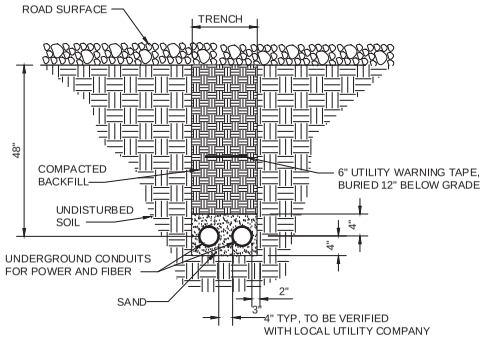

NOTES:

1. PROVIDE PVC CONDUIT BELOW GRADE EXCEPT AS NOTED BELOW
2. PROVIDE RGS CONDUIT & ELBOWS AT STUB UP LOCATIONS (ie POLES, EQUIPMENT, etc>)
3. PROVIDE RGS CONDUIT BELOW PARKING LOTS & ROADWAYS.

UNDER ROAD TRENCH DETAIL

NOT TO SCALE

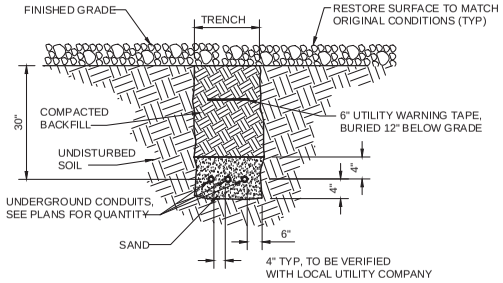

NOTES:

1. PROVIDE PVC CONDUIT BELOW GRADE EXCEPT AS NOTED BELOW
2. PROVIDE RGS CONDUIT & ELBOWS AT STUB UP LOCATIONS (ie POLES, EQUIPMENT, etc>)
3. PROVIDE RGS CONDUIT BELOW PARKING LOTS & ROADWAYS.

TYPICAL TRENCH DETAIL

NOT TO SCALE

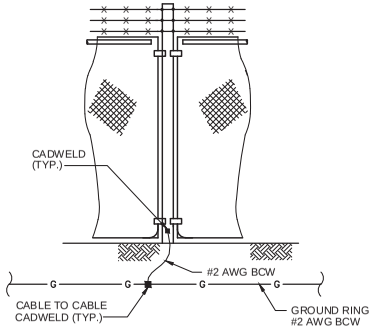

FENCE GROUNDING

NOT TO SCALE

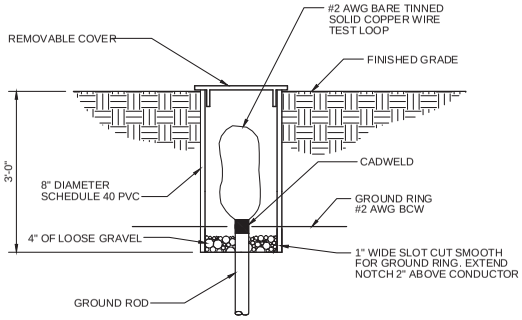

GROUND ROD INSPECTION WELL

NOT TO SCALE

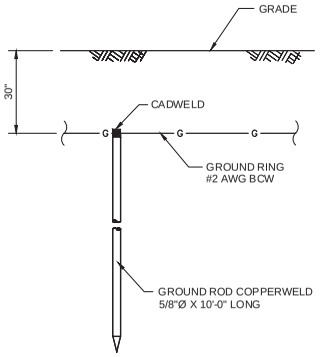

GROUND ROD DETAIL

NOT TO SCALE

TOWER OWNER:

AMERICAN TOWER

DEVELOPER:

TELECOM DEVELOPMENT SERVICES LLC

A&E FIRM:

POWERSOURCE
1875 OLD ALABAMA ROAD, SUITE 1008
ROSWELL, GA 30076
TEL 678-990-2338
FAX 678-990-2342
ENGINEER: ELIZABETH B. USHER

THE INFORMATION CONTAINED IN THIS SET OF DOCUMENTS IS PROPRIETARY BY NATURE. ANY USE OR DISCLOSURE OTHER THAN THAT WHICH RELATES TO THE CLIENT IS STRICTLY PROHIBITED.

A&E PROJECT #:	--
DRAWN BY:	WCG
CHECKED BY:	EBU

REVISIONS

NO.	DATE	DESCRIPTION
A	06/24/15	ISSUED FOR REVIEW
0	07/15/15	ISSUED FOR CONSTRUCTION
1	10/1/15	ISSUED FOR CONSTRUCTION

SITE NAME:

PCT SE PAPER GA

TOWER OWNER / SITE NUMBER:

AMERICAN TOWER

DESIGN TYPE:

GREENFIELD

SHEET TITLE:

GROUNDING DETAILS

DRAWING NO.	REVISION NO.
E4	1

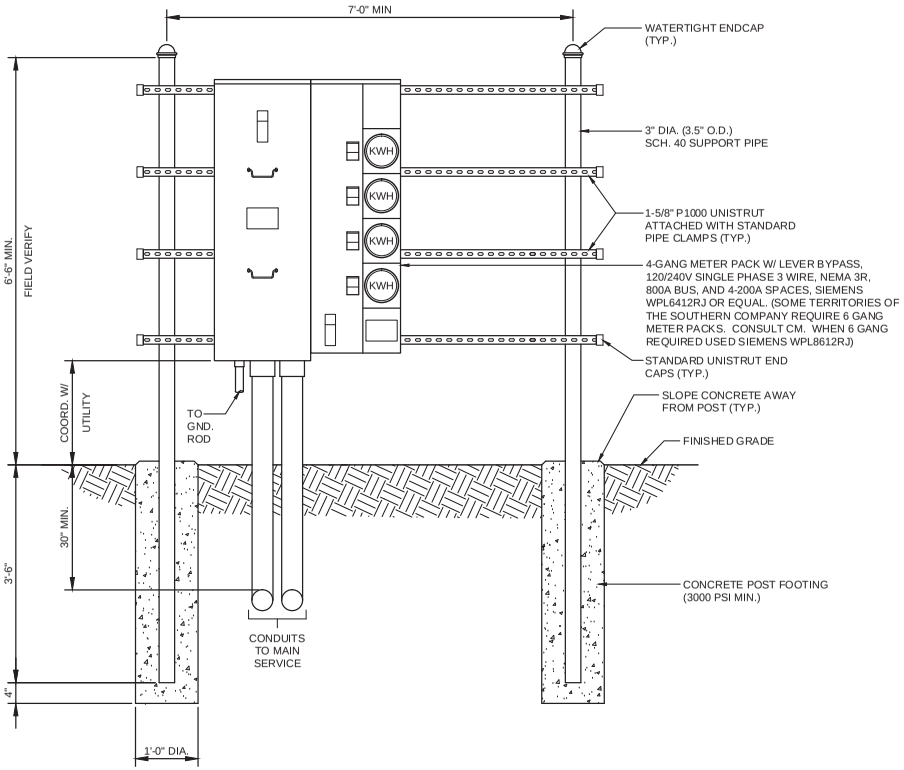

UTILITY FRAME DETAIL (GANG METER)

NOT TO SCALE

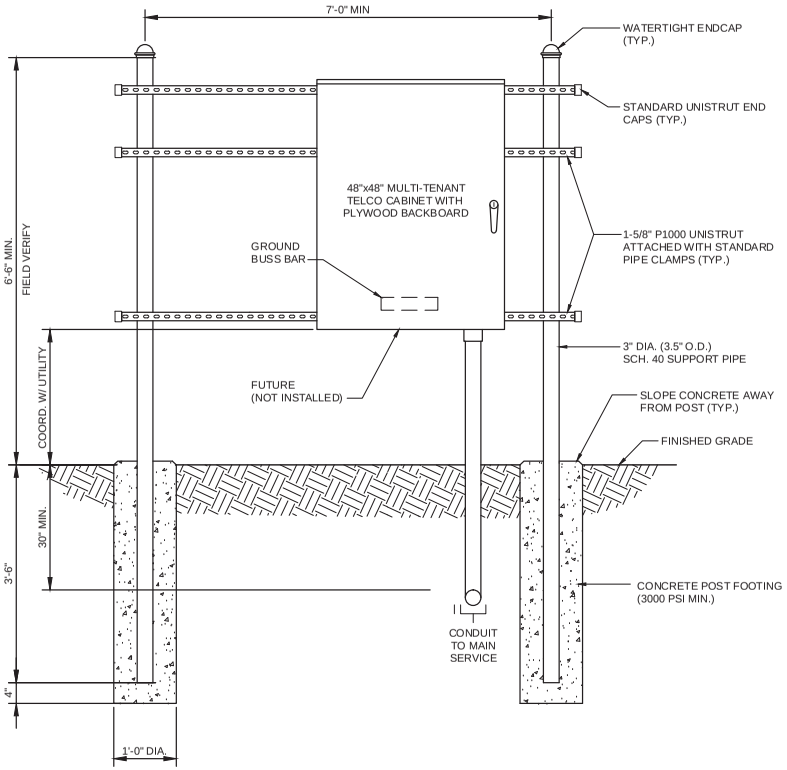

UTILITY FRAME DETAIL (TELCO)

NOT TO SCALE

NOTES:

1. ALL UNDERGROUND CONDUIT SHALL BE PVC SCHEDULE 40 UNLESS OTHERWISE INDICATED. ALL CONDUITS EXPOSED ABOVE GROUND SHALL BE RIGID GALVANIZED STEEL. ALL UNDERGROUND CONDUIT SHALL TRANSITION FROM PVC TO RIGID AT THE 90° BEND BELOW GRADE.
2. CONTRACTOR SHALL FIELD LOCATE THE METER PEDESTAL AS SHOWN ON SITE PLAN. INSTALL THE METER PEDESTAL NEAR THE PERIMETER OF THE FENCED COMPOUND WITH THE METERS FACING AS SHOWN.
3. THE CONTRACTOR SHALL COORDINATE WITH THE LOCAL UTILITY COMPANY FOR THE CONDUIT RUN TO THE MAIN SERVICE CONNECTION OR TRANSFORMER.
4. THE CONTRACTOR SHALL COORDINATE WITH THE LOCAL UTILITY COMPANY FOR GROUND ROD REQUIREMENTS. IF REQUIRED, THE CONTRACTOR SHALL ORDER AND PAY FOR NECESSARY GROUND TESTS.
5. SUPPORT POST AND UNISTRUT SHALL BE GALVANIZED. PIPE CLAMPS AND HARDWARE SHALL BE GALVANIZED OR STAINLESS STEEL.
6. TELCO CABINET SHALL BE 36"x48"x10" HOFFMAN OR EQUIVALENT. PROVIDE 3/4" PLYWOOD BACKBOARD INSIDE THE MULTI-TENANT TELCO CABINET.
7. ADJUSTMENTS TO THE METER PEDESTAL DESIGN MAY BE REQUIRED DEPENDING ON THE EXACT METER PANEL INSTALLED. CONTRACTOR SHALL FIELD COORDINATE ADJUSTMENTS AND INFORM THE ENGINEER IF ANY UNUSUAL CONDITIONS ARE FOUND TO EXIST.

TOWER OWNER:

AMERICAN TOWER

DEVELOPER:

TELECOM DEVELOPMENT SERVICES LLC

A&E FIRM:

POWERSOURCE
1875 OLD ALABAMA ROAD, SUITE 1008
ROSWELL, GA 30076
TEL 678-990-2338
FAX 678-990-2342
ENGINEER: ELIZABETH B. USHER

THE INFORMATION CONTAINED IN THIS SET OF DOCUMENTS IS PROPRIETARY BY NATURE. ANY USE OR DISCLOSURE OTHER THAN THAT WHICH RELATES TO THE CLIENT IS STRICTLY PROHIBITED.

A&E PROJECT #:	--
DRAWN BY:	WCG
CHECKED BY:	EBU

REVISIONS

NO.	DATE	DESCRIPTION
A	06/24/15	ISSUED FOR REVIEW
0	07/15/15	ISSUED FOR CONSTRUCTION
1	10/1/15	ISSUED FOR CONSTRUCTION

SITE NAME:

PCT SE PAPER GA

TOWER OWNER / SITE NUMBER:

AMERICAN TOWER

DESIGN TYPE:

GREENFIELD

SHEET TITLE:

METER DETAILS

DRAWING NO.	REVISION NO.
E5	1

SITE MAPS

PCT SE Paper GA
PCT SE Paper GA
Surface Water Feature
Google earth
© 2015 Google
N
1000 ft

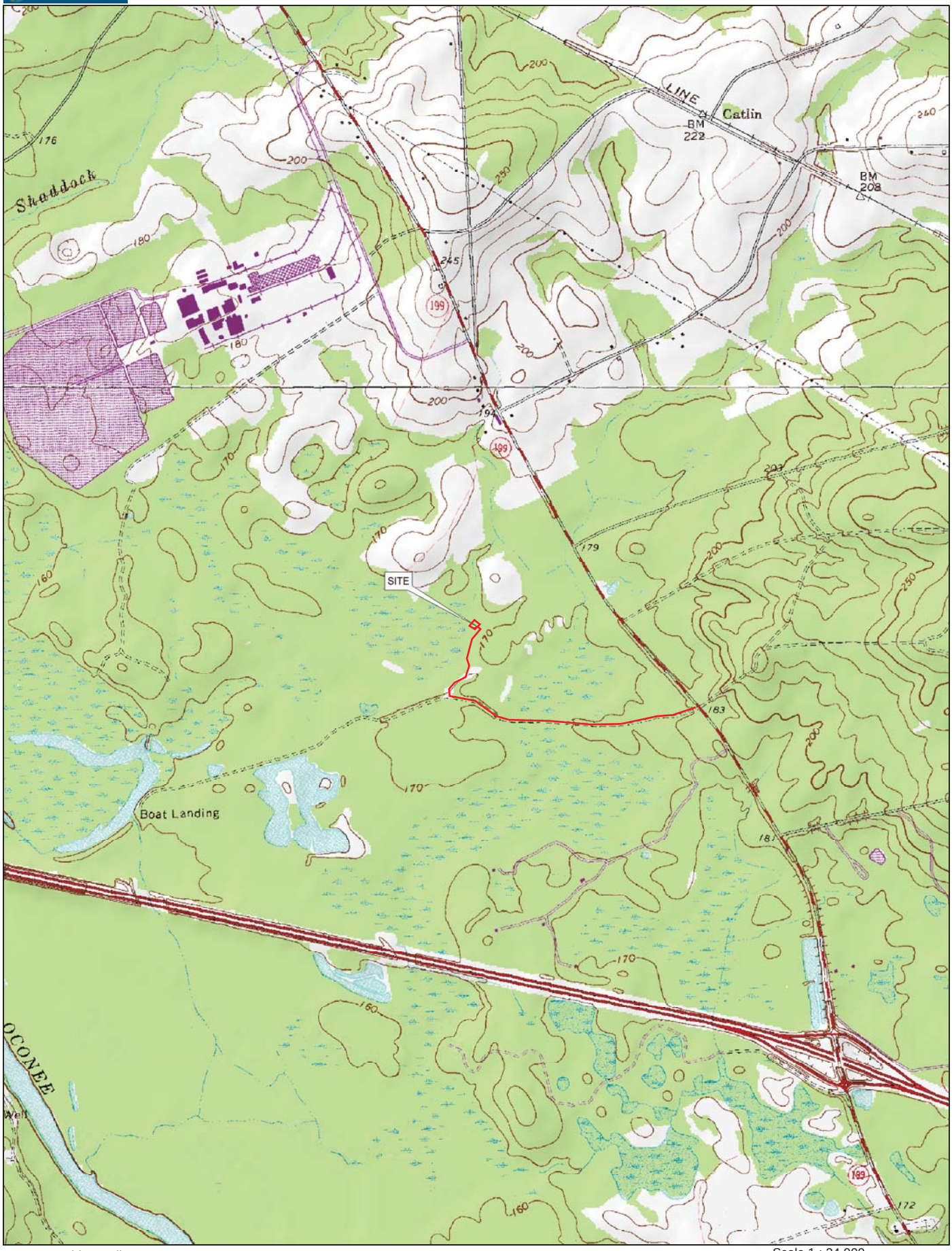

Data use subject to license.
© DeLorme. Topo North America™ 10.
www.delorme.com

TN
MN (5.9°W)

Scale 1 : 24,000
0 600 1200 1800 2400 3000 ft
0 200 400 600 800 1000 m
1" = 2,000.0 ft
Data Zoom 13-0

Map Scale: 1:6,500 if printed on A landscape (11" x 8.5") sheet.

N

Meters: 0 50 100 200 300

Feet: 0 300 600 1200 1800

Map projection: Web Mercator Corner coordinates: WGS84 Edge tics: UTM Zone 17N WGS84

MAP LEGEND

Area of Interest (AOI)

- Area of Interest (AOI)

Soils

- Soil Map Unit Polygons
- Soil Map Unit Lines
- Soil Map Unit Points

Special Point Features

- Blowout
- Borrow Pit
- Clay Spot
- Closed Depression
- Gravel Pit
- Gravelly Spot
- Landfill
- Lava Flow
- Marsh or swamp
- Mine or Quarry
- Miscellaneous Water
- Perennial Water
- Rock Outcrop
- Saline Spot
- Sandy Spot
- Severely Eroded Spot
- Sinkhole
- Slide or Slip
- Sodic Spot
- Spoil Area
- Stony Spot
- Very Stony Spot
- Wet Spot
- Other
- Special Line Features

Water Features

- Streams and Canals

Transportation

- Rails
- Interstate Highways
- US Routes
- Major Roads
- Local Roads

Background

- Aerial Photography

MAP INFORMATION

The soil surveys that comprise your AOI were mapped at 1:20,000.

Warning: Soil Map may not be valid at this scale.

Enlargement of maps beyond the scale of mapping can cause misunderstanding of the detail of mapping and accuracy of soil line placement. The maps do not show the small areas of contrasting soils that could have been shown at a more detailed scale.

Please rely on the bar scale on each map sheet for map measurements.

Source of Map: Natural Resources Conservation Service
Web Soil Survey URL: http://websoilsurvey.nrcs.usda.gov
Coordinate System: Web Mercator (EPSG:3857)

Maps from the Web Soil Survey are based on the Web Mercator projection, which preserves direction and shape but distorts distance and area. A projection that preserves area, such as the Albers equal-area conic projection, should be used if more accurate calculations of distance or area are required.

This product is generated from the USDA-NRCS certified data as of the version date(s) listed below.

Soil Survey Area: Johnson and Laurens Counties, Georgia
Survey Area Data: Version 7, Sep 19, 2014

Soil map units are labeled (as space allows) for map scales 1:50,000 or larger.

Date(s) aerial images were photographed: Apr 6, 2011—Apr 18, 2011

The orthophoto or other base map on which the soil lines were compiled and digitized probably differs from the background imagery displayed on these maps. As a result, some minor shifting of map unit boundaries may be evident.

Map Unit Legend

Johnson and Laurens Counties, Georgia (GA641)			
Map Unit Symbol	**Map Unit Name**	**Acres in AOI**	**Percent of AOI**
CnA	Clarendon loamy sand, 0 to 2 percent slopes	2.0	21.0%
DoB	Dothan loamy sand, 2 to 5 percent slopes	0.0	0.4%
FuB	Fuquay loamy sand, 0 to 5 percent slopes	4.3	45.4%
HM	Herod and Muckalee sandy loams, frequently flooded	2.2	23.3%
Od	Ocilla loamy sand, 0 to 2 percent slopes	0.5	4.8%
Ra	Rains sandy loam	0.5	5.0%
Totals for Area of Interest		**9.5**	**100.0%**

U.S. Fish and Wildlife Service

National Wetlands Inventory

NWI Map

Jun 29, 2015

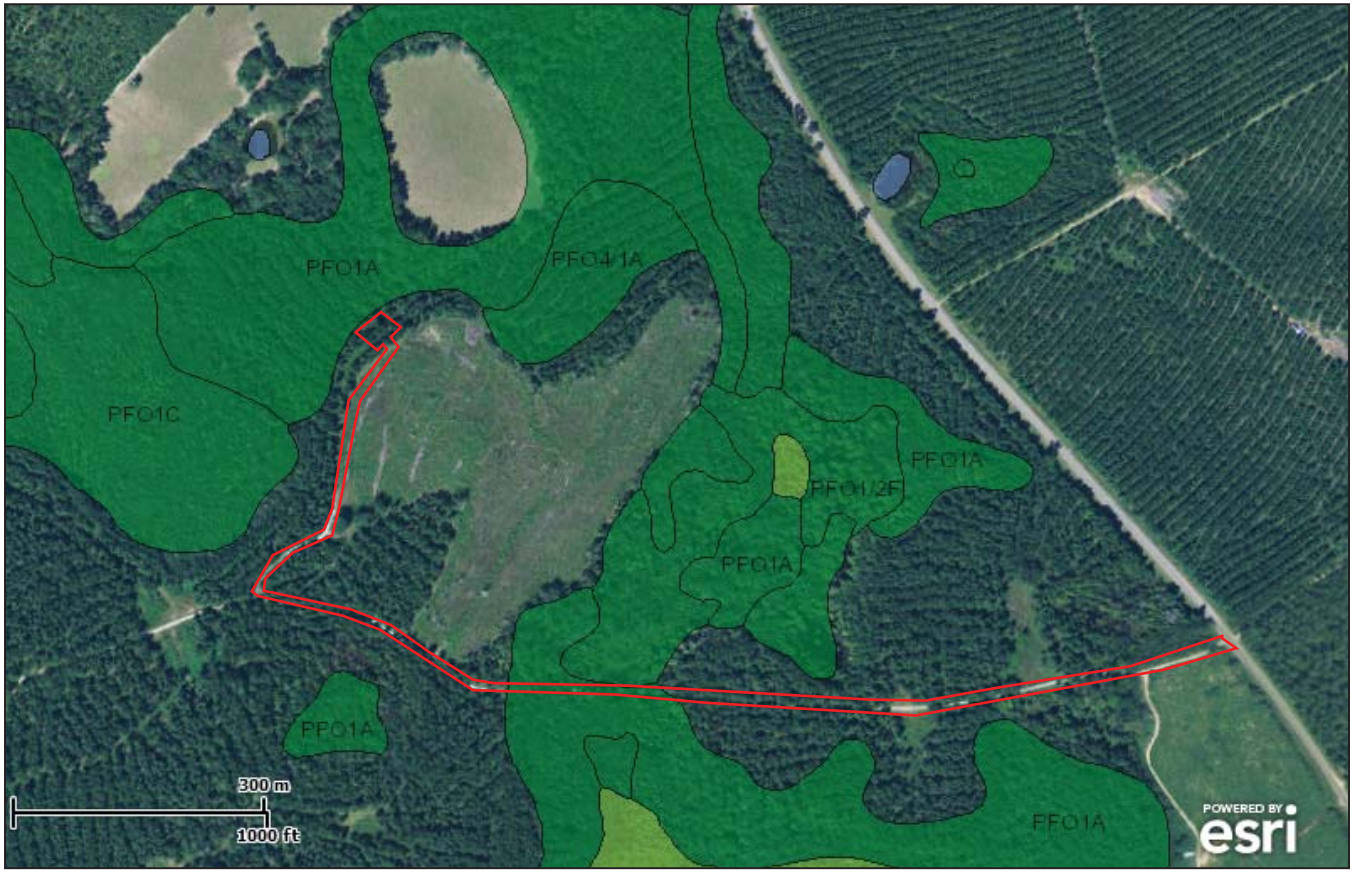

Wetlands

- Freshwater Emergent
- Freshwater Forested/Shrub
- Estuarine and Marine Deepwater
- Estuarine and Marine
- Freshwater Pond
- Lake
- Riverine
- Other

This map is for general reference only. The US Fish and Wildlife Service is not responsible for the accuracy or currentness of the base data shown on this map. All wetlands related data should be used in accordance with the layer metadata found on the Wetlands Mapper web site.

User Remarks:

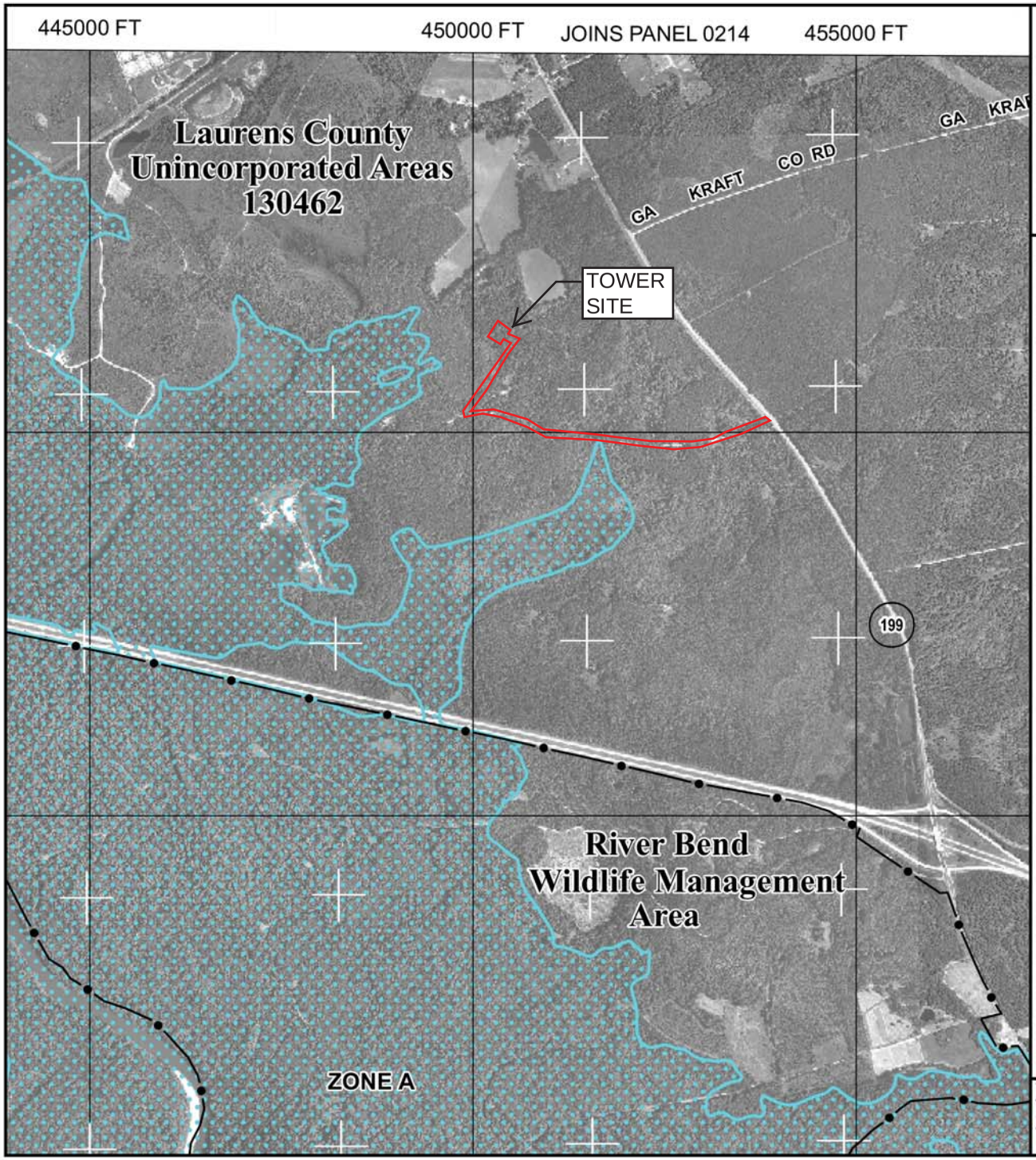

MAP SCALE 1" = 2000'

1000 0 2000 4000 FEET

ME

NFIP

NATIONAL FLOOD INSURANCE PROGRAM

PANEL 0350C

FIRM

FLOOD INSURANCE RATE MAP

LAURENS COUNTY, GEORGIA
AND INCORPORATED AREAS

PANEL 350 OF 550

(SEE MAP INDEX FOR FIRM PANEL LAYOUT)

CONTAINS:

COMMUNITY	NUMBER	PANEL	SUFFIX
LAURENS COUNTY	130462	0350	C

Notice to User: The **Map Number** shown below should be used when placing map orders; the **Community Number** shown above should be used on insurance applications for the subject community.

MAP NUMBER
13175C0350C

EFFECTIVE DATE
DECEMBER 17, 2010

Federal Emergency Management Agency

This is an official copy of a portion of the above referenced flood map. It was extracted using F-MIT On-Line. This map does not reflect changes or amendments which may have been made subsequent to the date on the title block. For the latest product information about National Flood Insurance Program flood maps check the FEMA Flood Map Store at www.msc.fema.gov

LEGEND

SPECIAL FLOOD HAZARD AREAS SUBJECT TO INUNDATION BY THE 1% ANNUAL CHANCE FLOOD

The 1% annual flood (100-year flood), also known as the base flood, is the flood that has a 1% chance of being equaled or exceeded in any given year. The Special Flood Hazard Area is the area subject to flooding by the 1% annual chance flood. Areas of Special Flood Hazard include Zones A, AE, AH, AO, AR, A99, V, and VE. The Base Flood Elevation is the water-surface elevation of the 1% annual chance flood.

ZONE A	No Base Flood Elevations determined.
ZONE AE	Base Flood Elevations determined.
ZONE AH	Flood depths of 1 to 3 feet (usually areas of ponding); Base Flood Elevations determined.
ZONE AO	Flood depths of 1 to 3 feet (usually sheet flow on sloping terrain); average depths determined. For areas of alluvial fan flooding, velocities also determined.
ZONE AR	Special Flood Hazard Area formerly protected from the 1% annual chance flood by a flood control system that was subsequently decertified. Zone AR indicates that the former flood control system is being restored to provide protection from the 1% annual chance or greater flood.
ZONE A99	Area to be protected from 1% annual chance flood by a Federal flood protection system under construction; no Base Flood Elevations determined.
ZONE V	Coastal flood zone with velocity hazard (wave action); no Base Flood Elevations determined.
ZONE VE	Coastal flood zone with velocity hazard (wave action); Base Flood Elevations determined.

FLOODWAY AREAS IN ZONE AE

The floodway is the channel of a stream plus any adjacent floodplain areas that must be kept free of encroachment so that the 1% annual chance flood can be carried without substantial increases in flood heights.

OTHER FLOOD AREAS

ZONE X	Areas of 0.2% annual chance flood; areas of 1% annual chance flood with average depths of less than 1 foot or with drainage areas less than 1 square mile; and areas protected by levees from 1% annual chance flood.

OTHER AREAS

ZONE X	Areas determined to be outside the 0.2% annual chance floodplain.
ZONE D	Areas in which flood hazards are undetermined, but possible.

COASTAL BARRIER RESOURCES SYSTEM (CBRS) AREAS

MAP SCALE 1" = 2000'

1000 0 2000 4000 FEET

ME

NFIP

NATIONAL FLOOD INSURANCE PROGRAM

PANEL 0350C

FIRM

FLOOD INSURANCE RATE MAP

LAURENS COUNTY, GEORGIA
AND INCORPORATED AREAS

PANEL 350 OF 550

(SEE MAP INDEX FOR FIRM PANEL LAYOUT)

CONTAINS:

COMMUNITY	NUMBER	PANEL	SUFFIX
LAURENS COUNTY	130462	0350	C

Notice to User: The **Map Number** shown below should be used when placing map orders; the **Community Number** shown above should be used on insurance applications for the subject community.

MAP NUMBER
13175C0350C

EFFECTIVE DATE
DECEMBER 17, 2010

Federal Emergency Management Agency

This is an official copy of a portion of the above referenced flood map. It was extracted using F-MIT On-Line. This map does not reflect changes or amendments which may have been made subsequent to the date on the title block. For the latest product information about National Flood Insurance Program flood maps check the FEMA Flood Map Store at www.msc.fema.gov

Surface Drinking Water Intakes for Public Water Supply in Georgia

Legend

- Surface Intake for Drinking Water System*
- River
- Stream**
- Reservoir/Lake
- Okefenokee Swamp
- US Congressional District Boundary
- Urban Area > 50,000 people
- County Boundary

CHATTANOOGA
DALTON
ROME
CARTERSVILLE
GAINESVILLE
ATLANTA
ATHENS
AUGUSTA
MACON
WARNER ROBINS
COLUMBUS
SAVANNAH
HINESVILLE
ALBANY
BRUNSWICK
VALDOSTA

Area Enlarged Lower Left

Approx. site location

N

0 25 50 75 100 Miles

Water quality in perennial waters is directly influenced by water quality in intermittent and ephemeral waters that feed into them.

Intake

2 Mile

Intake

Perennial Stream
Intermittent Stream
Water Supply Watershed

* = Single drinking water systems can have more than one intake
** = Due to scale, only named streams have been shown on this map.
Additional unnamed tributaries exist, but cannot be clearly mapped at this scale

Data Sources: USGS; US Census Bureau; EPA; SELC
Map created by: Jovian Sackett (jsackett@selcnc.org) | Last updated: May 12, 2015

Southern Environmental Law Center

SITE PHOTOGRAPHS

bing maps

Wetland Boundary Sketch provided for photo location references below

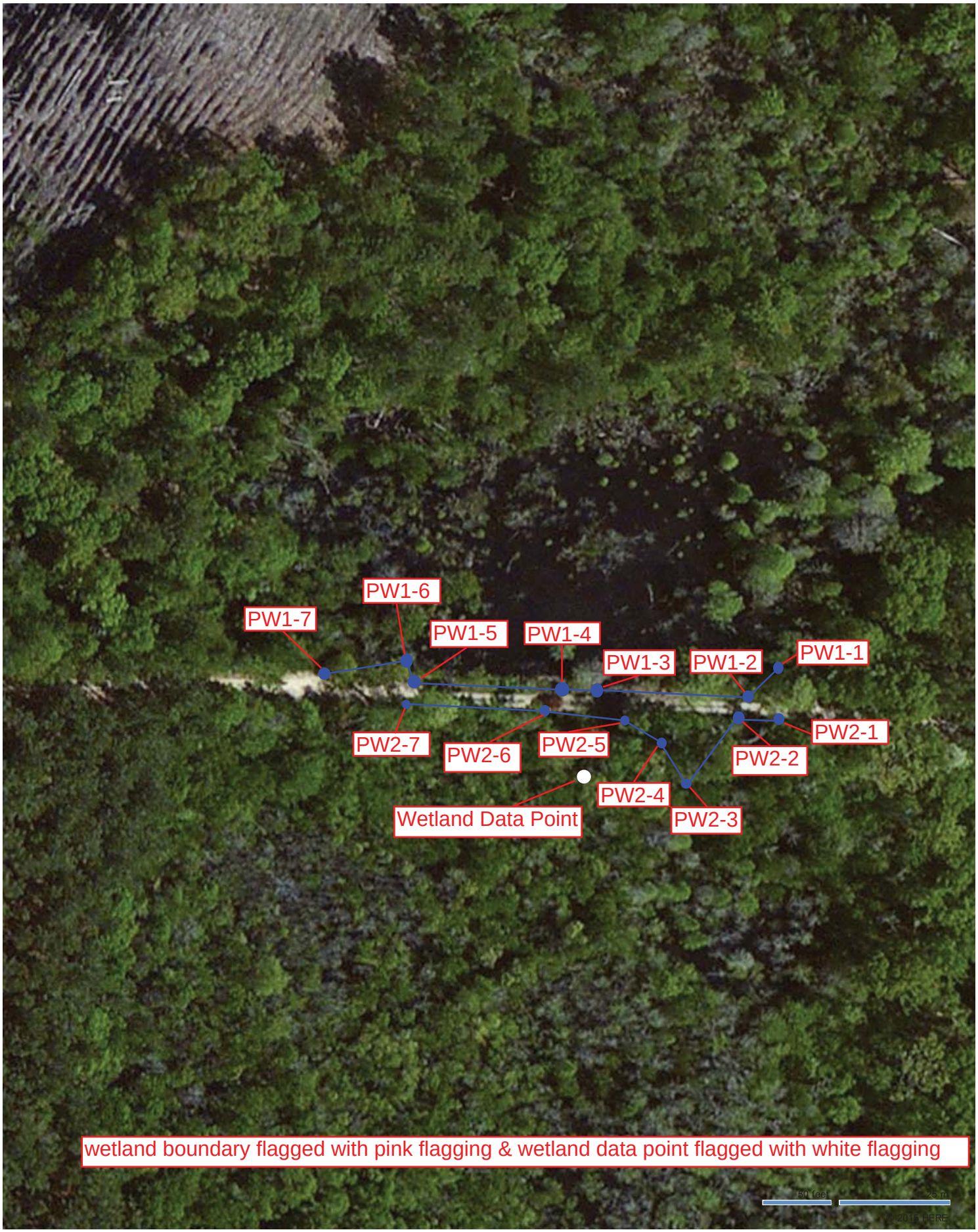

1) Photo facing west towards existing gravel logging road from S Hwy 199.

2) Photo facing east towards along existing gravel logging road towards project area.

3) Photo facing south towards PW2-7 located south of existing gravel road.

4) Photo facing east towards PW2-6 & PW2-5 located adjacent to southern side of access road.

5) Photo facing east-southeast towards PW2-5, PW2-2, & PW2-1 along southern side of gravel logging road.

6) Photo facing north from the low point in road towards existing wetland.

7) Photo facing northeast towards PW1-4 located along northern side of gravel logging road.

8) Photo facing east towards PW1-3 located along the northern side of the gravel logging road.

9) Photo facing north towards PW1-2 and PW1-1 located along northern side of gravel logging road.

10) Photo facing west along from PW1-2 along gravel logging access road.

11) Photo facing west-southwest towards PW2-2 & PW2-5.

12) Photo facing north towards PW2-3.

LAURENS COUNTY CORRESPONDENCE

Sarah-Beth Miller

From: Bryan Rogers <RogersB@dlcga.com>
Sent: Tuesday, February 23, 2016 4:52 PM
To: Sarah-Beth Miller
Subject: RE: Buffer Variance - Laurens County Georgia

Based on our inspection we have determined that it will not require a buffer variance since it is within the existing roadway.

Bryan Rogers
County Administrator
Laurens County, GA
Phone: 478.272.4755
www.laurenscoga.org

From: Sarah-Beth Miller [mailto:sbmiller@tepgroup.net]
Sent: Tuesday, February 23, 2016 3:39 PM
To: rogersb@dlcga.com
Subject: RE: Buffer Variance - Laurens County Georgia

Hi Mr. Rogers,

I wanted to follow up with you regarding the proposed tower site identified as PCT SE Paper GA that is to be located in Laurens County, GA. Can you confirm whether or not the project will require a buffer variance?

Thank you for your time,
Sarah-Beth Miller
Environmental Project Manager | Tower Engineering Professionals, Inc. (www.tepgroup.net)
326 Tryon Road|Raleigh, NC 27603-3530|Office: (919) 661-6351 ext. 5304|Fax: (919) 661-6350|Mobile: (919) 413-0918

From: James Ivey [mailto:iveyj@dlcga.com]
Sent: Monday, February 08, 2016 1:18 PM
To: Sarah-Beth Miller <sbmiller@tepgroup.net>
Cc: rogersb@dlcga.com
Subject: RE: Buffer Variance - Laurens County Georgia

Mrs. Miller,

I am sorry for the late response. I have been out of the office for a few days.

Bryan Rogers will handle this request, since the tower is outside of the City limits of Dublin.

Bryan Roger's number is (478) 272-4755.

Thank you,
James Ivey

From: Sarah-Beth Miller [mailto:sbmiller@tepgroup.net]
Sent: Monday, February 01, 2016 2:35 PM
To: James Ivey
Subject: RE: Buffer Variance - Laurens County Georgia

Mr. Ivey,

The latitude/longitude of the proposed access & utility easement that will be located adjacent/within a potential jurisdictional wetland are:
32.486124, -82.830257 (decimal degrees)
N 32°29'10.05", W 82°49'48.93" (NAD 83)

Additionally, the potentially jurisdictional wetland area is identified on page 4 of the attached site drawings and the proposed upgrades to the existing gravel access road within that area are identified on page 9. Further, I have attached an aerial photo of the site. Please let me know if you require any additional information.

Thank you for your help and time,
Sarah-Beth Miller
Environmental Project Manager | Tower Engineering Professionals, Inc. (www.tepgroup.net)
326 Tryon Road|Raleigh, NC 27603-3530|Office: (919) 661-6351 ext. 5304|Fax: (919) 661-6350|Mobile: (919) 413-0918

From: James Ivey [mailto:iveyj@dlcga.com]
Sent: Monday, February 01, 2016 1:46 PM
To: Sarah-Beth Miller <sbmiller@tepgroup.net>
Subject: RE: Buffer Variance - Laurens County Georgia

Please forward a site picture with GPS coordinates for us to look at.

Thanks,
James Ivey

From: Sarah-Beth Miller [mailto:sbmiller@tepgroup.net]
Sent: Tuesday, January 19, 2016 4:00 PM
To: RodgersB@dcga.com; iveyj@dlcga.com
Subject: Buffer Variance - Laurens County Georgia

Mr. Rogers and Mr. Ivey,

My name is Sarah-Beth Miller and I work for Tower Engineering Professionals, Inc. in Raleigh, NC. We have been contracted by American Towers (ATC) to complete an FCC NEPA Checklist for a proposed telecommunications tower site in Laurens County, GA. As part of the project approximately 0.0182 acres of a potentially jurisdictional wetland will be impacted by a portion of the proposed access & utility easement. Therefore, we are submitted and an expanded preliminary jurisdiction request to the US Army Corps Savannah District office along with the pre-construction notification and the Nationwide Permit application. However, as part of that process we need to determine if a buffer variance is required for the project by either contacting the GA EPD or the Local Issuing Authority.

The Georgia Environmental Protection Division Erosion & Sedimentation lists both of you as the Local Issuing Authorities for Laurens County, GA. Is this correct? If so, what information do you need from me to determine if a buffer variance will be needed for the site?

Thank you for your time,

Sarah-Beth Miller
Environmental Project Manager | Tower Engineering Professionals, Inc. (www.tepgroup.net)
326 Tryon Road|Raleigh, NC 27603-3530|Office: (919) 661-6351 ext. 5304|Fax: (919) 661-6350|Mobile: (919) 413-0918
Civil|Surveying|Environmental|PM&E|Structural|Inspections|Geotechnical and Material Testing|Construction|Renewable Energy

Sarah-Beth Miller

From: Jay Sanders <jay@telecom-development.com>
Sent: Thursday, February 04, 2016 9:45 AM
To: Andrella Slaughter
Subject: FW: Cell Tower on Plum Creek Property

Andrella,

I spoke to Don Bryant at Laurens County about the floodplain. I sent him over the drawings and the fema map. He concurs below that we are not impacting the floodplain so he does not need us to complete the floodplan application.

Thanks,

Jay Sanders
Telecom Development Services, LLC
2970 Peachtree Road, NW
Suite 621
Atlanta, GA 30305
(404) 934-5468 ©
(888) 736-3961 (F)
jay@telecom-development.com

From: Don Bryant [mailto:bryantdrfd1@gmail.com]
Sent: Thursday, February 4, 2016 7:51 AM
To: Jay Sanders
Subject: Re: Cell Tower on Plum Creek Property

Based on the information you forwarded to me I do not see any problems with floodplain issues. If you can, notify me when construction begins so I can document my file. Thanks Don

On Feb 1, 2016 2:22 PM, "Jay Sanders" <jay@telecom-development.com> wrote:

> Don,
>
> Based on our conversation last Thursday, if you don't mind taking a look at the plans, floodplain map and aerial map that I have attached to let me know if you think we are disturbing the floodplain I would appreciate it. I am available if you have any questions.
>
> Thanks,

Jay Sanders

Telecom Development Services, LLC

2970 Peachtree Road, NW

Suite 621

Atlanta, GA 30305

(404) 934-5468 ©

(888) 736-3961 (F)

jay@telecom-development.com

No virus found in this message.
Checked by AVG - www.avg.com
Version: 2016.0.7357 / Virus Database: 4522/11552 - Release Date: 02/04/16

THREATENED AND ENDANGERED SPECIES REVIEW

U.S. Fish & Wildlife Service

PCT SE Paper GA

IPaC Trust Resource Report

Generated June 29, 2015 07:19 AM MDT

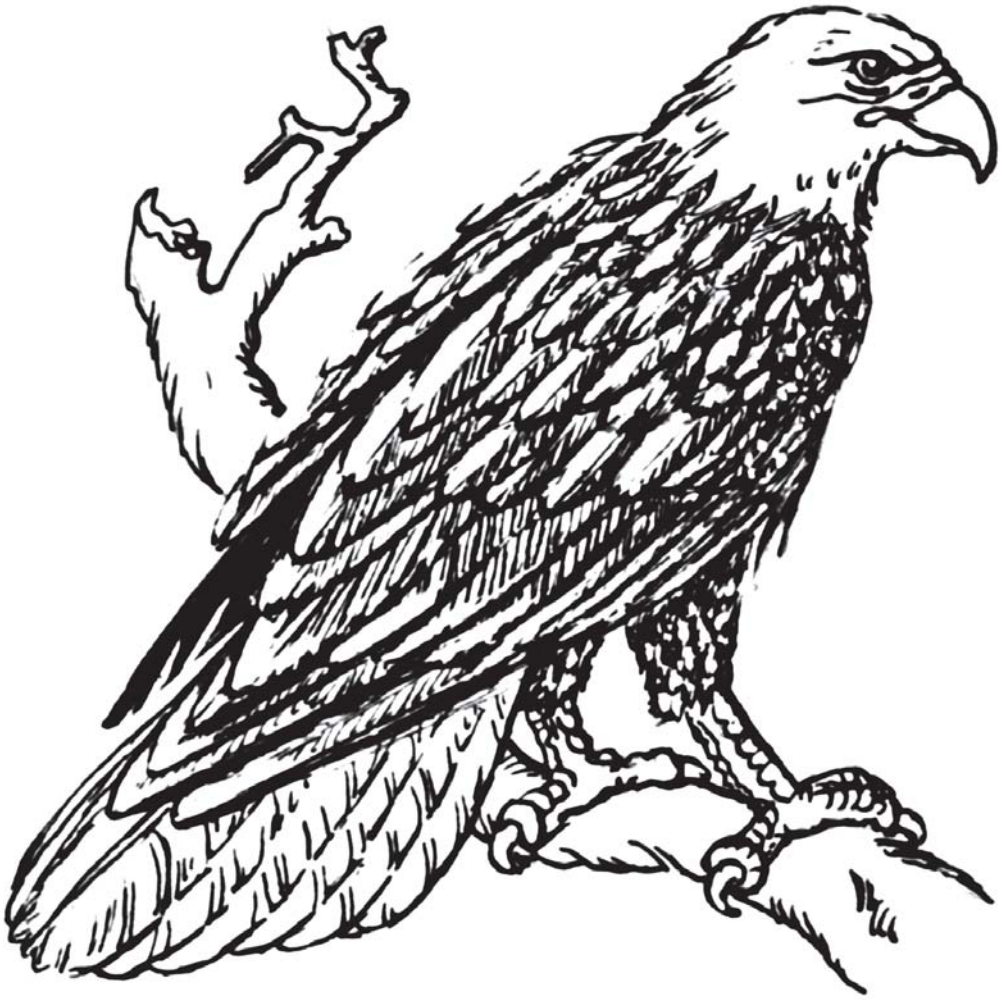

US Fish & Wildlife Service

IPaC Trust Resource Report

Project Description

NAME

PCT SE Paper GA

PROJECT CODE

4JZJH-D3PTJ-FAHMS-SWZ27-DQ2KSI

LOCATION

Laurens County, Georgia

DESCRIPTION

No description provided

U.S. Fish & Wildlife Contact Information

Species in this report are managed by:

Georgia Ecological Services Field Office
105 Westpark Drive
WESTPARK CENTER SUITE D
Athens, GA 30606-3175
(706) 613-9493

Endangered Species

Proposed, candidate, threatened, and endangered species that are managed by the Endangered Species Program and should be considered as part of an effect analysis for this project.

This unofficial species list is for informational purposes only and does not fulfill the requirements under Section 7 of the Endangered Species Act, which states that Federal agencies are required to "request of the Secretary of Interior information whether any species which is listed or proposed to be listed may be present in the area of a proposed action." This requirement applies to projects which are conducted, permitted or licensed by any Federal agency.

A letter from the local office and a species list which fulfills this requirement can be obtained by returning to this project on the IPaC website and requesting an Official Species List from the regulatory documents section.

Birds

Red-cockaded Woodpecker Picoides borealis **Endangered**

CRITICAL HABITAT
No critical habitat has been designated for this species.

https://ecos.fws.gov/speciesProfile/profile/speciesProfile.action?spcode=B04F

Fishes

Atlantic Sturgeon Acipenser oxyrinchus oxyrinchus **Endangered**

CRITICAL HABITAT
No critical habitat has been designated for this species.

https://ecos.fws.gov/speciesProfile/profile/speciesProfile.action?spcode=E0A7

Reptiles

Eastern Indigo Snake Drymarchon corais couperi **Threatened**

CRITICAL HABITAT
No critical habitat has been designated for this species.

https://ecos.fws.gov/speciesProfile/profile/speciesProfile.action?spcode=C026

Gopher Tortoise Gopherus polyphemus **Candidate**

CRITICAL HABITAT
No critical habitat has been designated for this species.

https://ecos.fws.gov/speciesProfile/profile/speciesProfile.action?spcode=C044

Critical Habitats

Potential effects to critical habitat(s) within the project area must be analyzed along with the endangered species themselves.

There is no critical habitat within this project area

Migratory Birds

Birds are protected by the Migratory Bird Treaty Act and the Bald and Golden Eagle Protection Act.

Any activity which results in the take of migratory birds or eagles is prohibited unless authorized by the U.S. Fish and Wildlife Service (1). There are no provisions for allowing the take of migratory birds that are unintentionally killed or injured.

You are responsible for complying with the appropriate regulations for the protection of birds as part of this project. This involves analyzing potential impacts and implementing appropriate conservation measures for all project activities.

American Kestrel Falco sparverius paulus **Bird of conservation concern**
Year-round

American Bittern Botaurus lentiginosus **Bird of conservation concern**
Season: Wintering
https://ecos.fws.gov/speciesProfile/profile/speciesProfile.action?spcode=B0F3

Bachman's Sparrow Aimophila aestivalis **Bird of conservation concern**
Year-round
https://ecos.fws.gov/speciesProfile/profile/speciesProfile.action?spcode=B07F

Bald Eagle Haliaeetus leucocephalus **Bird of conservation concern**
Year-round
https://ecos.fws.gov/speciesProfile/profile/speciesProfile.action?spcode=B008

Brown-headed Nuthatch Sitta pusilla **Bird of conservation concern**
Year-round

Chuck-will's-widow Caprimulgus carolinensis **Bird of conservation concern**
Season: Breeding

Common Ground-dove Columbina passerina exigua **Bird of conservation concern**
Year-round

Fox Sparrow Passerella iliaca **Bird of conservation concern**
Season: Wintering

Henslow's Sparrow Ammodramus henslowii **Bird of conservation concern**
Season: Wintering
https://ecos.fws.gov/speciesProfile/profile/speciesProfile.action?spcode=B09D

Kentucky Warbler Oporornis formosus **Bird of conservation concern**
Season: Breeding

Le Conte's Sparrow Ammodramus leconteii **Bird of conservation concern**
Season: Wintering

Least Bittern Ixobrychus exilis **Bird of conservation concern**
Season: Breeding

Loggerhead Shrike Lanius ludovicianus **Bird of conservation concern**
Year-round
https://ecos.fws.gov/speciesProfile/profile/speciesProfile.action?spcode=B0FY

Mississippi Kite Ictinia mississippiensis **Bird of conservation concern**
Season: Breeding

Painted Bunting Passerina ciris **Bird of conservation concern**
Season: Breeding

Prairie Warbler Dendroica discolor **Bird of conservation concern**
Season: Breeding

Prothonotary Warbler Protonotaria citrea **Bird of conservation concern**
Season: Breeding

Red-headed Woodpecker Melanerpes erythrocephalus **Bird of conservation concern**
Year-round

Rusty Blackbird Euphagus carolinus **Bird of conservation concern**
Season: Wintering

Sedge Wren Cistothorus platensis **Bird of conservation concern**
Season: Wintering

Swainson's Warbler Limnothlypis swainsonii **Bird of conservation concern**
Season: Breeding

Wood Thrush Hylocichla mustelina **Bird of conservation concern**
Season: Breeding

Worm Eating Warbler Helmitheros vermivorum **Bird of conservation concern**
Season: Migrating

Refuges

Any activity proposed on National Wildlife Refuge lands must undergo a 'Compatibility Determination' conducted by the Refuge. If your project overlaps or otherwise impacts a Refuge, please contact that Refuge to discuss the authorization process.

There are no refuges within this project area

Wetlands

Impacts to NWI wetlands and other aquatic habitats from your project may be subject to regulation under Section 404 of the Clean Water Act, or other State/Federal Statutes.

Project proponents should discuss the relationship of these requirements to their project with the Regulatory Program of the appropriate U.S. Army Corps of Engineers District.

DATA LIMITATIONS

The Service's objective of mapping wetlands and deepwater habitats is to produce reconnaissance level information on the location, type and size of these resources. The maps are prepared from the analysis of high altitude imagery. Wetlands are identified based on vegetation, visible hydrology and geography. A margin of error is inherent in the use of imagery; thus, detailed on-the-ground inspection of any particular site may result in revision of the wetland boundaries or classification established through image analysis.

The accuracy of image interpretation depends on the quality of the imagery, the experience of the image analysts, the amount and quality of the collateral data and the amount of ground truth verification work conducted. Metadata should be consulted to determine the date of the source imagery used and any mapping problems.

Wetlands or other mapped features may have changed since the date of the imagery or field work. There may be occasional differences in polygon boundaries or classifications between the information depicted on the map and the actual conditions on site.

DATA EXCLUSIONS

Certain wetland habitats are excluded from the National mapping program because of the limitations of aerial imagery as the primary data source used to detect wetlands. These habitats include seagrasses or submerged aquatic vegetation that are found in the intertidal and subtidal zones of estuaries and nearshore coastal waters. Some deepwater reef communities (coral or tuberficid worm reefs) have also been excluded from the inventory. These habitats, because of their depth, go undetected by aerial imagery.

DATA PRECAUTIONS

Federal, state, and local regulatory agencies with jurisdiction over wetlands may define and describe wetlands in a different manner than that used in this inventory. There is no attempt, in either the design or products of this inventory, to define the limits of proprietary jurisdiction of any Federal, state, or local government or to establish the geographical scope of the regulatory programs of government agencies. Persons intending to engage in activities involving modifications within or adjacent to wetland areas should seek the advice of appropriate federal, state, or local agencies concerning specified agency regulatory programs and proprietary jurisdictions that may affect such activities.

Freshwater Forested/shrub Wetland

PFO1A	86.6 acres
PFO1/2F	13.0 acres

TOWER ENGINEERING PROFESSIONALS, INC.
326 Tryon Road
Raleigh, NC, 27603

Office: (919) 661-6351
Fax: (919) 661-6350

July 17, 2015

American Towers LLC
10 Presidential Way
Woburn, MA 01801

Re: 201440
PCT SE Paper GA
S Hwy 199
Dublin, GA 31027
Consultant Project No. 61793

Tower Engineering Professionals, Inc. has been contracted by American Towers, LLC to provide environmental services for a proposed telecomunications tower for the purpose of completing an FCC NEPA review in accordance with 47 CFR 1.1.307. The purpose of this Informal Biological Assessment is to identify if any federal or state listed species and/or critical habitat will be affected by the proposed project and to determine if the proposed project will have any potential impacts to wetlands and migratory birds.

In accordance with 47 CFR 2.2308 (a) 3, TEP personnel reviewed the most current species lists for the county, database files, surveys, and maps maintained by the USFWS and state natural resource agencies, to identify what endangered, threatened, and proposed species, and designated and proposed critical habitats, may be in the action area (50 CFR 402.02).

Project Description:

The proposed telecommunications tower compound lease area and the proposed ingress-egress & utility easement will be located west of a portion of S Hwy 199, north of a portion of Interstate 16, and southeast of the City of Dublin, Laurens County, GA (See Appendix - Site Map). The proposed tower compound lease area, associated buffer, and the proposed ingress-egress & utility easement will be located on the northwestern portion of an approximately 3,303.36-acre parcel identified as Parcel: 203 064 by the Laurens County, GA Tax Assessors Office. Access to the site will be provided by a proposed 30-ft wide ingress-egress & utility easement, which will proceed west from a portion of S Hwy 199, along an existing earthen/gravel access drive for approximately 0.75-miles before turning northeast and continuing approximately 0.203-miles along a portion of an existing two-track and earthen access drive, and continuing approximately 35-ft through a portion of an undeveloped forested area until reaching the proposed 100-ft x 100-ft American Towers LLC compound lease area. The proposed action area consists of the aforementioned tower compound lease area and proposed ingress-egress & utility easement, along with an additional 30-ft buffer surrounding the proposed tower compound lease area. However, per correspondence with ATC, no improvements or disturbances assoicated with the proposed ingress-egress & utility easement will be located outside of the existing approximately 12-ft wide earthen/gravel access drive and the existing earthen and two-track access drive.

Project Location:

The proposed action area will be located west of a portion of S Hwy 199, north of a portion of Interstate 16, and southeast of a portion of the City of Dublin, within Laurens County, Georgia. The proposed action area is located within the northwestern portion of an approximately 3,303.36-acre parcel primarily occupied by forested/silvicultural land uses. The property is located in a portion of Laurens County where the surrounding land uses are primarily occupied by forested/silvicultural, low density residential, fallow, and industrial land uses associated with a paper mill.

At the time of inspection the proposed action area consisted of a portion of an existing earthen/gravel access drive, a portion of an existing earthen and two-track access drive, and a portion of a forested area occupied by early successional vegetation. The proposed tower compound lease area was primarily occupied by prickly Florida blackberry (*Rubus argutus*), muscadine (*Vitis rotundifolia*), common greenbrier (S*milax rotundifolia*), sweetgum (*Liquidambar styraciflua*), dog fennel (*Eupatorium capillifolium*), pond pine (*Pinus serotina*) with sparse occurrences of water oak (*Quercus nigra*), black walnut (*Juglans nigra*), American beautyberry (*Callicarpa Americana*), and swamp cyrilla (*Cyrilla racemiflora*). The 30-ft northern, eastern, and western tower compound lease area buffer was primarily occupied by prickly Florida blackberry (Rubus argutus), common greenbrier (*Smilax rotundifolia*), sweetgum (*Liquidambar styraciflua*), dog fennel (*Eupatorium capillifolium*), muscadine (*Vitis rotundifolia*), and pond pine (*Pinus serotina*) and sparse occurrences of American beautyberry (*Callicarpa Americana*) and swamp cyrillia (*Cyrilla racemiflora*). The southern 30-ft buffer was primarily occupied by dog fennel (*Eupatorium capillifolium*), muscadine (*Vitis rotundifolia*), common greenbrier (*Smilax rotundifolia*), and prickly Florida blackberry (*Rubus argutus*), fescue (*Festuca*), and a portion of the existing two-track access drive and proposed ingress-egress & utility easement.

Wetland Discussion:

According to an informal wetland delineation and site survey provided by ATC, wetlands are located throughout the parent property; however the proposed tower compound lease area and existing access drives were not identified as being located within the identified wetlands on the property. According to the aforementioned wetland delineation and site survey, portions of the northern, northwestern, and northeastern 30-ft buffer areas appear to be located within a portion of a wetland. Additionally portions of the 30-ft wide ingress-egress & utility easement appear to be located within portions of wetlands located on the property; however per correspondence with ATC, no improvements or disturbances associated with the proposed action will occur outside of the existing earthen/gravel access drive and the existing earthen and two-track drive.

At the time of inspection, no surface water, water-stained leaves, water marks, saturation of any additional wetland hydrology indicators were observed within the proposed tower compound lease area or 30-ft buffer areas. TEP personnel utilized the USFWS National Wetlands Inventory (NWI) mapper to determine if any wetlands were identified as being located on or within the immediate vicinity of the proposed action area. According to the NWI map, the northern and northwestern portions of the tower compound lease area are identified as being located within a freshwater forested/shrub wetland. Additionally, a portion of the existing earthen/gravel access drive is identified as being located within a portion of a freshwater forested/shrub wetland. Further, the Laurens County GIS indicates that a "blue line" stream flows south-southwesterly through the parent property from a portion of S Hwy 199 and through a portion of the existing earthen/gravel access drive and proposed ingress-egress & utility easement. A wetland (swamp) was observed immediately adjacent to the northern and southern portions of the existing earthen/gravel access drive and within the proposed 30-ft wide ingress-egress & utility easement. At the time of inspection, an approximately 12-ft wide x 6-ft long area of surface water connecting the northern and southern portions of the aforementioned wetland was observed within the existing earthen/gravel access drive and the proposed ingress-egress & utility easement, located approximately 0.45-miles west of a portion of S Hwy 199.

According to the Web Soil Survey of Laurens County, the soils within the subject property are identified as Clarendon loamy sand, 0 to 2 % slopes (CnA), Fuquay loamy sand, 0 to 5 % slopes (FuB), Herod and Muckalee sandy loams, frequently flooded (HM), Ocilla loamy sand, 0 to 2 % slopes (Od), Rains sandy loam (Ra), and Dothan loamy sand, 2 to 5 % slopes (DoB). Herod and Muckalee sandy loams and Claredon loamy sand are identified as being located within a portion of the proposed tower compound lease area and a portion of the ingress-egress & utility easement. Fuquay loamy sand, Ocilla loamy sand, Rains sandy loam, and Dothan loamy sand are identified as being located within the proposed ingress-egress & utility easement. According to the USDA National Hydric Soils List (Updated March 2014), Herod and Muckalee sandy loams, Clarendon loamy sand,Ocilla loamy sand, and Rains sand are identified as hydric soils in Laurens County, GA; Fuquay loamy sand and Dothan loamy sand are not identified as hydric soils within Laurens County, GA.

According to the the Atlantic and Gulf Coastal Plain 2014 Regional Wetland Plant List, completed by the US Army Corps of Engineers (ACOE), the vegetation within the proposed action area is identified as having a facultative and facultative wetland indicator status. According to the US ACOE Wetlands Delineation Manual published in 1987, Facultative vegetation is described as plants with a similar likelihood (estimated probability 33% to 67%) of occurring in both wetlands and non-wetlands. Facultative wetland vegetation is described as plants that usually occurs in wetlands (estimated probability 67% to 99%), but occasionally found in non-wetlands.

According to the informal wetland delineation and site survey which were provided by ATC, the proposed tower compound lease area is not located within a wetland; however portions of the northwestern, northern, and northeastern 30-ft tower compound buffer areas appear to be located within a portion of the delineated wetland and portions of the proposed 30-ft wide ingress-egress & utility easement appear to be located within portions of wetlands on the property. However, surface water connecting the northern and southern portions of what appears to be jurisdictional waters of the U.S. on the property was observed within a portion of the existing earthen/gravel access drive and a portion of the proposed ingress-egress and utility easement. If any improvements (gravel fill, culverts, etc.) to the aforementioned portion of the existing access drive and proposed ingress-egress & utility easement are necessary for the proposed action, it is the opinion of TEP that a jurisdictional determination and Nationwide Permit be obtained from the U.S. Army Corps of Engineers prior to any improvements associated with the proposed action.

Threatened and Endangered Species Discussion:

Review of the USFWS Information, Planning, and Conservation System (IPAC) preliminary species list for Laurens County, GA indicated the possible presence of two (2) federally listed terrestrial threatened or endangered species: red-cockaded woodpecker (*Picoides borealis*) and the Eastern indigo snake (*Drymarchon corais couperi*). Additionally the aforementioned preliminary species list indicated the possible presence of one (1) candidate species: gopher tortoise (*Gopherus polyphemus*).

Review of the Georgia Department of Natural Resources Wildlife Resources Division (Georgia DNRWRD), results for the USGS 7.5-Minute Minter, GA Northwest Topographic Quadrangle, indicated the possible presence of two (2) protected terrestrial species: Rafinesque's big-eared bat (*Corynorhinus rafinesquii*) and the swamp buckhorn (*Sideroxylon thornei*).

The site inspection performed on July 8, 2015 consisted of a pedestrian inspection of the proposed action area and the immediate vicinity for indications of the presence of federally listed species and/or their critical habitats and preferred/suitable habitats, as described by the USFWS and the Georgia DNRWRD. Additionally, due to the nature of the project and the distance from the nearest river (greater than 1-mile), the proposed action area is not anticipated to have the potential to affect any of the federal or state listed aquatic species in Laurens County, GA (Atlantic sturgeon (*Acipenser oxyrinchus oxyrinchus*)). Further, according to the USFWS Critical Habitat Portal, there are no officially designated critical habitats located on, or in the vicinity of the proposed action area.

Red-cockaded woodpecker (*Picoides borealis*): The red-cockaded woodpecker is listed as a federal endangered species in Laurens County, GA. According to the information obtained from the USFWS, the woodpecker prefers to nest in mature pine stands with low understory vegetation and prefers to forage in mixed pine and hardwood stands greater than 30 years of age and consisting of trees with an average diameter greater than 10-inches dbh. At the time of inspection the proposed action area consisted of a portion of an earthen/gravel access drive, a portion of an earthen and two-track access drive, and a portion of a forested area primarily occupied by early successional vegetation consisting of prickly Florida blackberry (*Rubus argutus*), muscadine (*Vitis rotundifolia*), common greenbrier (*Smilax rotundifolia*), sweetgum (*Liquidambar styraciflua*), dog fennel (*Eupatorium capillifolium*), pond pine (*Pinus serotina*) with sparse occurrences of water oak (*Quercus nigra*), black walnut (*Juglans nigra*), American beautyberry (*Callicarpa Americana*), and swamp cyrilla (*Cyrilla racemiflora*). The 30-ft northern, eastern, and western tower compound lease area buffer was primarily occupied by prickly Florida blackberry (*Rubus argutus*), common greenbrier (*Smilax rotundifolia*), sweetgum (*Liquidambar styraciflua*), dog fennel (*Eupatorium capillifolium*), muscadine (*Vitis rotundifolia*), and pond pine (*Pinus serotina*) and sparse occurrences of American beautyberry (*Callicarpa Americana*) and swamp cyrillia (*Cyrilla racemiflora*). The southern 30-ft buffer was primarily occupied by dog fennel (*Eupatorium capillifolium*), muscadine (*Vitis rotundifolia*), common greenbrier (*Smilax rotundifolia*), and prickly Florida blackberry (*Rubus argutus*), fescue (*Festuca*), and a portion of the existing two-track access drive and proposed ingress-egress & utility easement. The aforementioned pine and hardwood trees observed within the proposed action area were less than 6-inches dbh, therefore it is the opinion of TEP personnel that no potentially suitable nesting or foraging habitat for the red-cockaded woodpecker exists within the limits of the proposed action area. Additionally, no occurrences of the red-cockaded woodpecker were observed at the time of inspection. Further, the proposed action area is relatively small and utilizes an existing earthen/gravel access road and an existing two-track access drive. Therefore, due to the absence of potentially suitable habitat, lack of occurrences, and the minimal extent of disturbance associated with the proposed action it is the opinion of TEP that the proposed action will have **no effect** on the red-cockaded woodpecker (*Picoides borealis*).