Environmental Assessment

Moore Park
Pyramid Network Services
Trileaf # 646371
White Road
Bailey, MI

Prepared For:
Pyramid Network Services
6615 Towpath Road
East Syracuse, NY 13057

Prepared By:

TRILEAF™
ENVIRONMENTAL • ARCHITECTURE • ENGINEERING

May 17, 2019

TABLE OF CONTENTS

SECTION **PAGE**

1. INTRODUCTION 1

1.1. Purpose 1

1.2. Limitations and Exceptions to Assessment 1

2. SITE DESCRIPTION 1

2.1. Property Location 1

2.2. Site Characteristics 1

2.3. Proposed Improvements 2

2.4. Zoning 2

3. POTENTIAL IMPACTS OF THE PROPOSED TOWER 2

3.1. Designated Wilderness Areas 2

3.2. Designated Wildlife Preserves 3

3.3. Listed, Proposed, Threatened or Endangered Species and Critical Habitat 3

3.5. Federally Designated Historic and Cultural Resources 4

3.6. Native American Religious or Sacred Sites 4

3.7. Floodplains 4

Trileaf reviewed the relevant Federal Emergency Management Agency (FEMA) Flood Insurance Rate Map (FIRM) Panel #26121C0250D, dated October, 2017, to determine if the project was located within the 100-year floodplain. Trileaf determined that the property is located in Zone X, areas determined to be outside the 500-year floodplain. Therefore, the project site is not located within a 100-year floodplain. A copy of the FEMA flood map is located in Appendix 7.1. 5

3.8. Surface Features – Wetlands, Deforestation or Fill 5

3.9. Zoning/High Intensity White Lights 5

3.10. Exposure of Workers or General Public to Excess Levels of Radio Frequency 5

3.11. Investigation of Alternative Location 5

3.12. Public Comment 6

4. CONCLUSIONS 6

5. SIGNATURES OF ENVIRONMENTAL PROFESSIONALS 7

6. QUALIFICATIONS OF ENVIRONMENTAL PROFESSIONALS 8

7. APPENDICES

7.1. Site Maps and Photographs

7.2. NEPA Report

7.3. Construction Drawings

7.4. Permits and Documentation

7.5. FCC EA Deficiency Checklist

7.6 Qualifications of Environmental Professionals

1. INTRODUCTION

Pyramid Network Services, retained Trileaf Corporation (Trileaf) to conduct an Environmental Assessment (EA) of a proposed telecommunications tower facility located at White Road, Bailey, MI 49303. The EA is mandated by the Federal Communications Commission (FCC) (47 CFR 1.1307) in its procedures to implement the National Environmental Policy Act of 1969 (NEPA).

1.1. Purpose

Trileaf reviewed documentation for the subject site in accordance with the FCC NEPA procedures outlined in 47 CFR 1.1307. As noted in the initial NEPA Summary Checklist provided in Appendix 7.2, all items were answered in the negative with the exception of the tower facility height. According to Note to paragraph (d) of 47 CFR 1.1307, an environmental assessment must be prepared for an antenna structure over 450 feet above ground level (AGL) that considers effects on migratory birds, for an otherwise categorically excluded action. Therefore, this EA has been conducted to address Note to paragraph (d) of 47 CFR 1.1307.

1.2. Limitations and Exceptions to Assessment

The information contained in this report is limited to the review of information obtained from the NEPA document dated, March 29, 2019, and prepared by Trileaf, and to subsequent research, as discussed in this report.

2. SITE DESCRIPTION

2.1. Property Location

The subject site is located at White Road, Bailey, MI 49303, and Latitude: 43-15-45.6 N, Longitude: 85-48-27.7 W. A topographic map is provided in Appendix 7.1.

2.2. Site Characteristics

This site consists of forested land. Photographs of the site, which were taken by Ms. Camille Neitzel of Trileaf on December 10, 2018, are included in Appendix 7.1.

During the site reconnaissance, the current use of the surround properties was observed. The surrounding habitat within a 0.5-mile radius of the proposed site consists predominantly of forested land. To the north is forested land, followed by White Road, followed by a freshwater emergent wetland, followed by residential development, followed by forested land, followed by a freshwater pond, followed by more forested land, followed by a freshwater forested/shrub wetland, followed by a freshwater pond. To the east is forested land, followed by Westveer Lane, followed by farmland. To the south is forested land, followed by East Moore Co Park Road,

followed by forested land, followed by a freshwater emergent wetland, followed by Half Moon Lake. To the west is a freshwater emergent wetland, followed by a freshwater forested/shrub wetland, followed by a riverine, followed by Casnovia Township Park, followed by Half Moon Lake, followed by a freshwater forested/shrub wetland, followed by Mud Lake.

2.3. Proposed Improvements

This project involves the review of the proposed construction of a 475-foot tall self-support telecommunications tower, with an overall height of 488 feet, with all appurtenances. The proposed tower will be within an 80-foot by 80-foot (6,400-square-foot) lease area. In addition, the project includes an access/utility easement, measuring approximately 12 feet wide, extending from the north side of the proposed compound into a proposed service vehicle turn-around, and then east approximately 85 feet to an existing access drive. Construction Drawings are included in Appendix 7.3.

2.4. Zoning

According to a parcel report for this site, provided by the Muskegon County Assessor's website and the Casnovia Township Zoning Ordinance, both included in Appendix 7.4, the zoning classification of the site was determined to be Zone A-1 (Exclusive Agricultural). The principal purpose of this zoning district is to maintain, preserve and enhance prime agricultural lands, to allow maximum freedom of operations for agricultural pursuits, and to protect such uses from encroachment of non-agricultural uses. According to the Casnovia Township Zoning Ordinance, no building or structure shall be erected, enlarged or structurally altered without first obtaining a zoning compliance permit from the administrator of the township and a building permit from the building inspector as required by the State Construction Code.

According to the Casnovia Township Zoning Ordinance, a Special Use Permit (SUP) is required. This SUP allows the property to enjoy uses in excess of those permitted by the existing zoning, A-1, of the site.

On May 10, 2019, Doug Hopkins, Casnovia Township Building Inspector, issued a building permit for the construction of a telecommunications compound. The building permit expires in six (6) months on November 10, 2019.

3. POTENTIAL IMPACTS OF THE PROPOSED TOWER

Trileaf reviewed each of the following criteria to determine if the project had an impact per 47 CFR 1.1307. All of the documentation described below can be found in the additional site maps in Appendix 7.1, the NEPA report in Appendix 7.2, or the permits and documentation in Appendix 7.4.

3.1. Designated Wilderness Areas

Trileaf reviewed the USGS 7.5-minute topographic map "Grant" Quadrangle, and the National Wilderness Preservation System website (www.wilderness.net) for designated wilderness areas to determine that the site was not located in an officially designated wilderness or wildlife area. Trileaf determined that the proposed tower is not located in a designated wilderness area. There are currently sixteen (16) officially designated wilderness areas in the State of Michigan. The closest wilderness area to the project site is the Nordhouse Dunes

Wilderness Area, which is located approximately 65 miles northwest of the project site. Trileaf determined that the proposed tower is not located in a designated wilderness area.

3.2. Designated Wildlife Preserves

Trileaf reviewed the USGS 7.5-minute topographic map "Grant" Quadrangle, the United States Fish & Wildlife Service National Wildlife Refuges website (www.fws.gov/refuges/) and the National Parks Service website (www.nps.gov) to determine that the site was not located in an officially designated wildlife preserve or refuge. Based on this review, the project site was determined to not be located within an officially designated wildlife preserve or refuge. A copy of the Refuges and Park maps are provided in Appendix 7.1.

3.3. Listed, Proposed, Threatened or Endangered Species and Critical Habitat

On December 10, 2018, a Trileaf representative visited and photographed the project site to conduct an Informal Biological Assessment (IBA). In addition, Trileaf reviewed the United States Fish and Wildlife Service (USFWS) critical habitat information and determined that the site is not located within designated critical habitat. Based on the results of our assessment, impacts to listed and/or proposed, threatened and endangered species or critical habitats resulting from the proposed action are not anticipated. Therefore, Trileaf determined that the proposed project site "may affect but is not likely to adversely affect" the species, their habitats, or designated critical habitats.

On January 14, 2019, Trileaf reviewed the Section 7 Consultation guidance set forth by the USFWS – East Lansing, Michigan Ecological Services Field Office and on February 7, 2019, Trileaf submitted the project to the USFWS for review. On February 21, 2019, the USFWS responded that the project may adversely affect the Indiana bat (*Myotis sodalis*) due to tree removal during the summer months. On March 11, 2019, Dr. Allen Kurta, Biological Consultant, performed a habitat assessment for the Indiana bat on behalf of Trileaf. In his report, dated March 14, 2019, Dr. Kurta identified one (1) potential low-quality roost tree within the project area. On March 14, 2019, Trileaf submitted the results to the USFWS for review and on March 28, 2019, the USFWS provided concurrence with the results of the habitat assessment and findings in the IBA under the stipulation that an emergence survey be performed on the single potential roost tree to demonstrate the absence of roosting bats on the landscape prior to the removal of any trees at the site, as well as the implementation of motion- or heat-sensitive, down-shielded, and minimum intensity security lighting on all on-ground facilities, equipment, and infrastructure to reduce nighttime bird attraction.

3.4. Migratory Birds

Trileaf reviewed available information relevant to migratory bird impacts and summarized that material here for consideration. According to estimated mapped migratory bird flyways posted on http://www.birdnature.com/flyways.html, the Property is located near a main route of the Mississippi migratory bird flyway. Upon our site investigation, it was determined that the project area is not located in a National Wetlands Inventory mapped wetland, waterway, wildlife refuge, national wilderness area, native grassland, ridge-line, mountain top, coastline or area commonly known to have high incidences of fog or low clouds, where migratory birds may be found. There are no significant topographic features on the landscape near the site, and the proposed tower is not located on a local high point that would increase potential effects to migratory birds. Based upon the efforts undertaken during the IBA as well as the current data

made available; we have concluded that this project will not have a significant effect on migratory birds; however, the presence of migratory birds cannot be ruled out.

Using the FAA's ASR database, a total of two (2) towers were identified within a 3-mile radius from the proposed tower site. The nearest registered tower is a 310-foot guyed tower located approximately 2.22 miles north-northwest of the proposed tower site. The siting of this tower near additional towers reduces the sensitivity of the area and decreases the potential effects to migratory birds.

It is Trileaf's understanding that the Federal Aviation Administration (FAA) has determined that the proposed tower does not exceed obstruction standards and would not be a hazard to air navigation as long as the FAA Form 7460-2, Notice of Actual Construction or Alteration, is e-filed any time the project is abandoned or within 5 days after the construction reaches its greatest height (7460-2, Part 2). The absence of steady burning Red Obstruction (L-810) lights on this structure will not impair aviation safety and is expected to reduce potential effects to migratory birds. The reviewed information indicates that the proposed project should have no significant impact on migratory birds. The FAA determination is included in Appendix 7.4.

3.5. Federally Designated Historic and Cultural Resources

Trileaf performed a Section 106 Review in accordance with the Nationwide Programmatic Agreement for Review of Effects on historic Properties for Certain Undertakings Approved by the Federal Communications Commission (FCC) dated September 2004. Our investigation includes determining if the site is contained in, on, or within the viewshed of a building, site, district, structure, or object, significant in American history, architecture, archaeology, engineering, or culture, that is listed, or eligible for listing on the State or National Registers of Historic Places or located in or on an Indian Religious Site.

Mr. Mark Branstner, Secretary of Interior-qualified Archaeologist contracted by Trileaf through Great Lakes Research, LLC, to identify any cultural resources within the area of direct effects and within a 1.5-mile radius for visual effects. It was determined that there were no historic properties identified within the Area of Potential Effects (APE) for direct effects, and no historic properties identified within the APE for visual effects. Additionally, the identification process did not locate archaeological materials that would be directly affected, or sites that are of cultural or religious significance to Tribes/NHOs. Documentation of these reviews was submitted to the SHPO via Form 620 on December 20, 2018. The SHPO concurred that the proposed undertaking would have no direct or visual effects on historic properties in a response letter dated February 8, 2019. The Cultural Resource Review and all correspondences with the SHPO are included in Appendix 7.2.

3.6. Native American Religious or Sacred Sites

This project has been submitted to potentially interested tribes via the FCC's TCNS website. On, December 4, 2018, Trileaf submitted the Tower Construction Notification to the FCC who initiated the contact with the tribes on December 7, 2018. On December 21, 2018, Trileaf attempted to contact all Native American Tribes with interest in the project area for a second time. On March 22, 2019, all tribes were cleared. Trileaf determined that the property is not located on or near a Native American Religious or Sacred Site. Tribal correspondences can be found in Appendix 7.2.

3.7. Floodplains

Trileaf reviewed the relevant Federal Emergency Management Agency (FEMA) Flood Insurance Rate Map (FIRM) Panel #26121C0250D, dated October, 2017, to determine if the project was located within the 100-year floodplain. Trileaf determined that the property is located in Zone X, areas determined to be outside the 500-year floodplain. Therefore, the project site is not located within a 100-year floodplain. A copy of the FEMA flood map is located in Appendix 7.1.

3.8. Surface Features – Wetlands, Deforestation or Fill

Trileaf used local maps, the USGS topographic map "Grant" Quadrangle, the United States Department of Agriculture (USDA) Soil Survey, survey drawings, the USFWS National Wetlands Inventory Map, and site reconnaissance, to determine if the proposed project would have an impact on any wetlands or require significant amounts of fill or grading. Trileaf determined that there was the potential for federally designated wetlands on or in the immediate vicinity of the proposed project site. In December of 2018, Timothy Bureau Consulting, LLC completed a wetland delineation of the project area on behalf of Trileaf. In the Regulatory Wetland Delineation Report, dated December 28, 2018, it was determined that a wetland does not exist on or in the immediate vicinity of the proposed project site. The soil survey, topographic map, wetlands map, and wetland delineation documents can be found in Appendix 7.1.

3.9. Zoning/High Intensity White Lights

The FAA conducted an aeronautical study concerning the proposed Moore Park telecommunications tower site. This study revealed that the structure does not exceed obstruction standards and would not be a hazard to air navigation provided the following condition is met: It is required that the FAA Form 7460-2, Notice of Actual Construction or Alteration, be e-filed any time the project is abandoned or within 5 days after the construction reaches its greatest height (7460-2, Part 2). The FAA study is included in Appendix 7.4.

3.10. Exposure of Workers or General Public to Excess Levels of Radio Frequency

This category applies to FCC licensees and not antenna structure owners. Antenna structures (tower) do not emit radio frequency radiation. FCC licensees transmitting from antennas mounted on Pyramid Network Services-owned antenna structures are required to comply with radio frequency exposure standards.

3.11. Investigation of Alternative Locations

The location of telecommunication towers is typically selected after consideration of other properties based upon coverage objectives, structural considerations, and eliminating the need for future telecommunication towers built within the area to support new networks. Additionally, the selection of wireless telecommunication facilities is based on the established grid within a specific service area. As such, there is limited flexibility when selecting the exact locations of new facilities to allow for factors such as acceptable coverage, available sites, and sites which are environmentally sensitive.

In this case, no other alternatives were considered due to the fact that the height of the proposed telecommunication tower exceeds 450 feet, requiring an EA regardless of the tower location. Additionally, the candidate site location was selected to accommodate the expansion of

cellular and wireless emergency services to adjacent communities in both Muskegon County and Kent County. Therefore, the no action alternative of not constructing the tower would be a resulting gap in coverage objectives and lack of network reliability in the area for emergency services personnel.

3.12. Public Comment

At this time, Trileaf is unaware of any public controversy or comments regarding the proposed telecommunications tower. On December 16, 2018, Trileaf published a notice of the review of the proposed tower in the *Muskegon Chronicle* requesting comments regarding historical concerns. On December 7, 2018, Ms. Ruth Ann Bull, Office Administrator for Casnovia Township, and the Muskegon County Historical Society were invited to comment on the project's potential effects. No comments or complaints from members of the public regarding this tower have been received to date.

4. CONCLUSIONS

Trileaf performed a NEPA Report as mandated by the Federal Communications Commission (FCC) (47 CFR 1.1307) in its procedures to implement the National Environmental Policy Act of 1969 (NEPA). Details of the NEPA Report are outlined in Trileaf's NEPA Report, dated March 29, 2019. The NEPA Report is provided in Appendix 7.2.

The NEPA Report identified additional risks to migratory bird species given the height of the tower in the affirmative. Therefore, this EA has been conducted to address Note to paragraph (d) of 47 CFR 1.1307, which states that an environmental assessment must be prepared for an antenna structure over 450 feet AGL that considers effects on migratory birds. Based on the informal biological assessment, consultation with USFWS, and the conclusions of the FAA study, the proposed project is not expected to have a significant impact on migratory birds.

5. SIGNATURES OF ENVIRONMENTAL PROFESSIONALS

This Environmental Assessment was performed in accordance with the generally accepted practices in the field of environmental consulting. The analysis and recommendations indicated in this report are based upon the best current available information that could be obtained in the specified time frame. Trileaf assumes no liability for unauthorized, independent conclusions or recommendations made by others in conjunction with the data presented in this report.

Respectfully submitted,

Trileaf Corporation

Lauren Sereno
Project Scientist I

Clint Carlson
Project Manager

6. QUALIFICATIONS OF ENVIRONMENTAL PROFESSIONALS

Resumes are attached

Appendix 7.1
Site Maps and Photographs

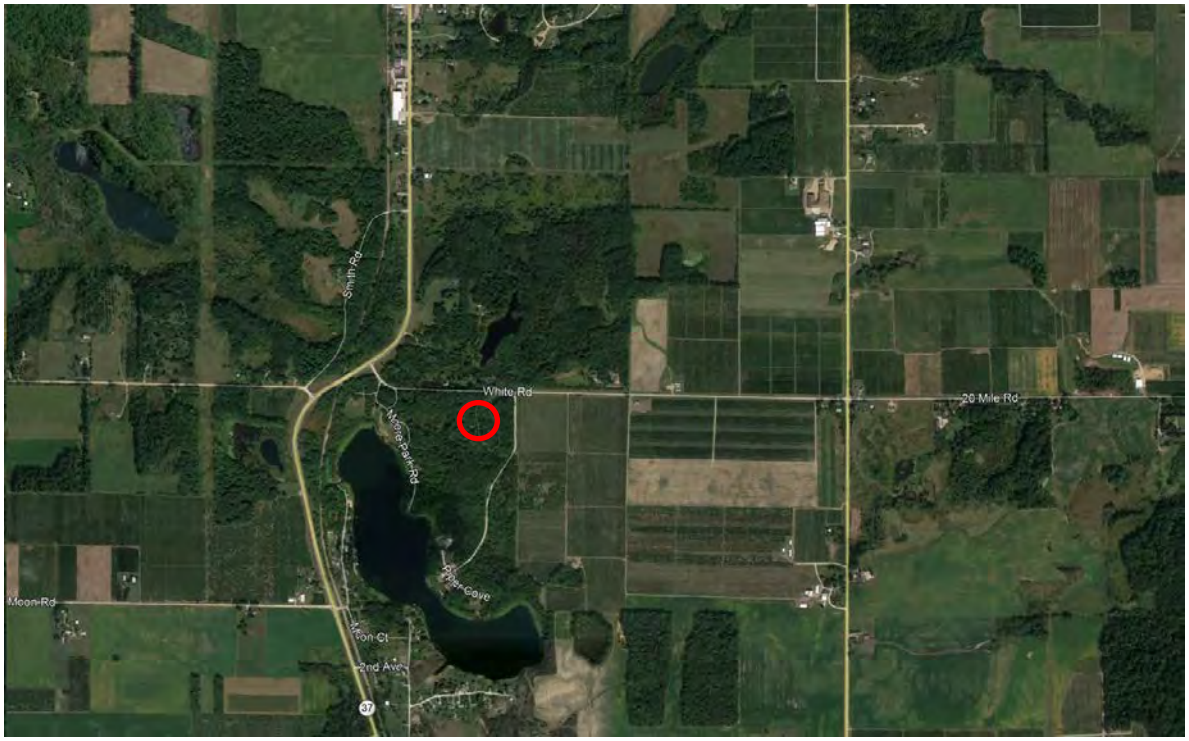

Site Location & Surrounding Properties

Site Location - - - - - Easement

Aerial Photographs (2017)

Pyramid Network Services – Moore Park
White Road
Bailey, Michigan 49303

TRILEAF
ENVIRONMENTAL • ARCHITECTURE • ENGINEERING

Grant Quadrangle, Michigan (2017)
Contour Interval = 10 Feet
Scale 1 Inch = ~2,000 Feet
Latitude: 43° 15' 45.6" Longitude: -85° 48' 27.7"
Township: T10N Range: R13W Section: S13

North

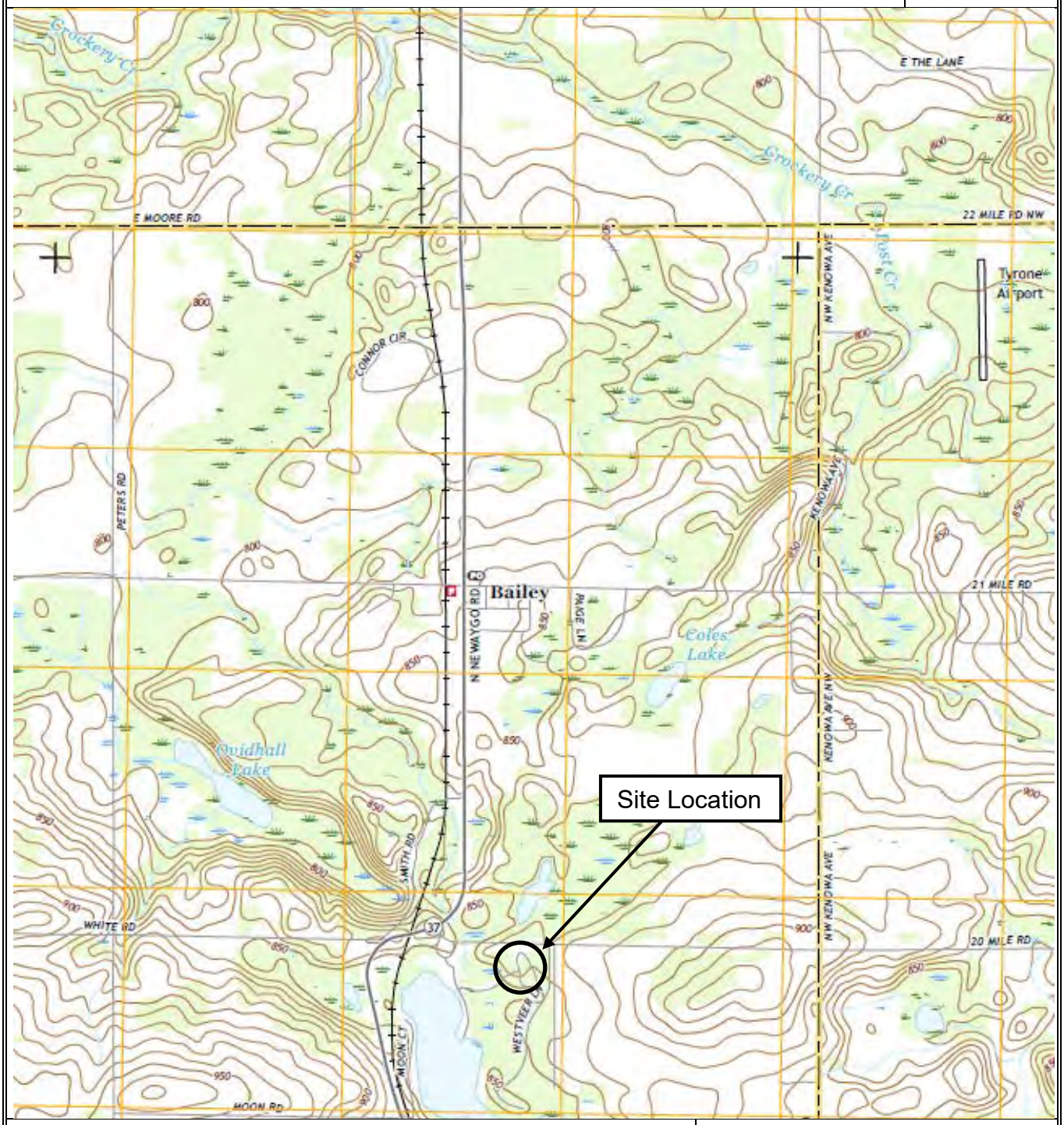

Site Vicinity Map

Pyramid Network Services – Moore Park
White Road
Bailey, MI 49303

TRILEAF
ENVIRONMENTAL • ARCHITECTURE • ENGINEERING

National Flood Hazard Layer FIRMette

FEMA

43°15'58.70"N

85°48'46.43"W

85°48'8.97"W

43°15'32.50"N

Feet 1:6,000

0 250 500 1,000 1,500 2,000

Legend

SEE FIS REPORT FOR DETAILED LEGEND AND INDEX MAP FOR FIRM PANEL LAYOUT

SPECIAL FLOOD HAZARD AREAS
- Without Base Flood Elevation (BFE) *Zone A, V, A99*
- With BFE or Depth *Zone AE, AO, AH, VE, AR*
- Regulatory Floodway

OTHER AREAS OF FLOOD HAZARD
- 0.2% Annual Chance Flood Hazard, Areas of 1% annual chance flood with average depth less than one foot or with drainage areas of less than one square mile *Zone X*
- Future Conditions 1% Annual Chance Flood Hazard *Zone X*
- Area with Reduced Flood Risk due to Levee. See Notes. *Zone X*
- Area with Flood Risk due to Levee *Zone D*

OTHER AREAS
- NO SCREEN Area of Minimal Flood Hazard *Zone X*
- Effective LOMRs
- Area of Undetermined Flood Hazard *Zone D*

GENERAL STRUCTURES
- Channel, Culvert, or Storm Sewer
- Levee, Dike, or Floodwall

OTHER FEATURES
- B 20.2 17.5 Cross Sections with 1% Annual Chance Water Surface Elevation
- 8 Coastal Transect
- 513 Base Flood Elevation Line (BFE)
- Limit of Study
- Jurisdiction Boundary
- Coastal Transect Baseline
- Profile Baseline
- Hydrographic Feature

MAP PANELS
- Digital Data Available
- No Digital Data Available
- Unmapped

N

The pin displayed on the map is an approximate point selected by the user and does not represent an authoritative property location.

This map complies with FEMA's standards for the use of digital flood maps if it is not void as described below. The basemap shown complies with FEMA's basemap accuracy standards

The flood hazard information is derived directly from the authoritative NFHL web services provided by FEMA. This map was exported on 12/5/2018 at 8:41:29 AM and does not reflect changes or amendments subsequent to this date and time. The NFHL and effective information may change or become superseded by new data over time.

This map image is void if the one or more of the following map elements do not appear: basemap imagery, flood zone labels, legend, scale bar, map creation date, community identifiers, FIRM panel number, and FIRM effective date. Map images for unmapped and unmodernized areas cannot be used for regulatory purposes.

U.S. Fish and Wildlife Service
National Wetlands Inventory

Wetlands

December 5, 2018

Wetlands

- Estuarine and Marine Deepwater
- Estuarine and Marine Wetland
- Freshwater Emergent Wetland
- Freshwater Forested/Shrub Wetland
- Freshwater Pond
- Lake
- Other
- Riverine

This map is for general reference only. The US Fish and Wildlife Service is not responsible for the accuracy or currentness of the base data shown on this map. All wetlands related data should be used in accordance with the layer metadata found on the Wetlands Mapper web site.

National Wetlands Inventory (NWI)
This page was produced by the NWI mapper

Wetlands Map Viewer

December 5, 2018

Part 303 Final Wetlands Inventory

- Wetlands as identified on NWI and MIRIS maps
- Soil areas which include wetland soils
- Wetlands as identified on NWI and MIRIS maps and soil areas which include wetland soils

1:4,662

0 0.0375 0.075 0.15 mi

0 0.05 0.1 0.2 km

Sources: Esri, HERE, Garmin, USGS, Intermap, INCREMENT P, NRCan, Esri Japan, METI, Esri China (Hong Kong), Esri Korea, Esri (Thailand), NGCC, © OpenStreetMap contributors, and the GIS User Community
Source: Esri, DigitalGlobe, GeoEye, Earthstar Geographics, CNES/Airbus DS,

Disclamer: This map is not intended to be used to determine the specific locations and jurisdictional boundaries of wetland areas subject to regulation. More information regarding this map, including how to obtain a copy can be accessed at www.michigan.gov/wetlands.

Map by: State of Michigan - CSS

copyright 2018

Site Photograph 1 – Looking north at the Site

Site Photograph 2 – Looking south at the Site

Site Photographs

Pyramid Network Services – Moore Park
White Road
Bailey, Michigan 49303

Photographed:

December 10, 2018

Site Photograph 3 – Looking east at the Site

Site Photograph 4 – Looking west at the Site

Site Photographs

Pyramid Network Services – Moore Park
White Road
Bailey, Michigan 49303

Photographed:

December 10, 2018

Site Photograph 5 – Looking north away from the Site

Site Photograph 6 – Looking south away from the Site

Site Photographs

Pyramid Network Services – Moore Park
White Road
Bailey, Michigan 49303

Photographed:

December 10, 2018

Site Photograph 7 – Looking east away from the Site

Site Photograph 8 – Looking west away from the Site

Site Photographs

Pyramid Network Services – Moore Park
White Road
Bailey, Michigan 49303

Photographed:

December 10, 2018

Site Photograph 9 – Looking west along the access easement

Site Photograph 10 – Looking east along the access easement

Site Photographs

Pyramid Network Services – Moore Park
White Road
Bailey, Michigan 49303

Photographed:

December 10, 2018

Site Photograph 11 – Looking north at easement

Site Photograph 12 – Looking south at easement

Site Photographs

Pyramid Network Services – Moore Park
White Road
Bailey, Michigan 49303

Photographed:

December 10, 2018

Site Photograph 13 – Trees to be removed (DBH avg. 1 inch)

Site Photograph 14 – Tree to be removed (DBH approx.18 inches)

Site Photographs

Pyramid Network Services – Moore Park
White Road
Bailey, Michigan 49303

Photographed:
December 10, 2018

Site Photograph 15 – Trees to be removed (DBH approx. 2 to 21 inches)

Site Photograph 16 – Trees to be removed (DBH approx. 6 to 13 inches)

Site Photographs

Pyramid Network Services – Moore Park
White Road
Bailey, Michigan 49303

Photographed:

December 10, 2018

Site Photograph 17 – Trees to be removed (DBH approx. 8 to 16 inches)

Site Photograph 18 – Trees to be removed (DBH avg. 2 inches)

Site Photographs

Pyramid Network Services – Moore Park
White Road
Bailey, Michigan 49303

Photographed:

December 10, 2018

Appendix 7.2
NEPA Report and Wetlands Delineation Report

TRILEAF™

ENVIRONMENTAL • ARCHITECTURE • ENGINEERING

NEPA Report

March 29, 2019

Moore Park

White Road
Bailey, Michigan 49303
Trileaf # 646371

Prepared For:

Pyramid Network Services
6615 Towpath Road
East Syracuse, NY 13057

Prepared By:

Trileaf Corporation
1821 Walden Office Square, Suite 510
Schaumburg, IL 60173

TRILEAF™
ENVIRONMENTAL • ARCHITECTURE • ENGINEERING

NEPA Report Summary

Site Name/Location:

Moore Park / Trileaf # 646371
White Road, Bailey, Michigan 49303
Latitude: 43° 15' 45.6" N, Longitude: 85° 48' 27.7" W

Project Description:

Pyramid Network Services proposes to construct a 475-foot-tall (488-feet-overall) self-support telecommunications tower and associated equipment within a proposed 80-foot by 80-foot (6,400-square-foot) lease area. An approximately 12-foot-wide access easement is proposed to extend north from the north side of the proposed telecommunications compound into a proposed service vehicle turn-around, and then east approximately 83.4 feet to an existing access drive.

1. Is the facility located in an officially designated wilderness area? [47 CFR 1.1307 (a)(1)]

Yes	No		Data Sources:
☐	☒		Site Reconnaissance Review of 7.5-Minute USGS Topographic Map (Appendix B) National Wilderness Preservation System Website (www.wilderness.net)

2. Is the facility located in an officially designated wildlife preserve? [47 CFR 1.1307 (a)(2)]

Yes	No		Data Sources:
☐	☒		Site Reconnaissance Review of 7.5-Minute USGS Topographic Map (Appendix B) US Fish & Wildlife Service National Wildlife Refuge System Map (Appendix B)

3. Will the facility: (i) affect listed threatened or endangered species or designated critical habitats; or (ii) jeopardize the continued existence of any proposed endangered or threatened species; or is it likely to result in the destruction or adverse modification of proposed critical habitats, as determined by the Secretary of the Interior pursuant to the Endangered Species Act of 1973? [47 CFR 1.1307 (a)(3)]

Yes	No		Data Sources:
☒	☐	**Conditional Clearance**	Site Reconnaissance Review of US Fish & Wildlife Service Critical Habitat and Federally Listed Endangered Species (Appendix D) Informal Biological Assessment (Appendix D) Correspondence with US Fish & Wildlife Service (Appendix D)

4. Will the facility affect districts, sites, buildings, structures, or objects significant in American history, architecture, archeology, engineering or culture, that are listed, or are eligible for listing on the State or National Registers of Historic Places? [47 CFR 1.1307 (a)(4)]

Yes	No		Data Sources:
☐	☒		Site Reconnaissance Cultural Resource Investigation (Appendix E) State Historic Preservation Office Section 106 Review (Appendix E)

5. Will the facility affect an Indian religious site? [47 CFR 1.1307 (a)(5)]

Yes	No		Data Sources:
☐	☒	**Conditional Clearance**	Site Reconnaissance Correspondence with Native American Tribes via FCC TCNS (Appendix F) Review of Bureau of Indian Affairs Indian Reservation Map (Appendix B)

6. Will the facility be located in a "floodplain", and not be placed at least one (1) foot above the base flood elevation of the floodplain? [47 CFR 1.1307 (a)(6)]

Yes	No		Data Sources:
☐	☒		Review of FEMA Flood Map (Appendix B)

7. Will the construction of the facility involve significant change in surface features (e.g. wetland fill, deforestation, or water diversion)? [47 CFR 1.1307 (a)(7)]

Yes	No		Data Sources:
☐	☒		Site Reconnaissance Review of 7.5-Minute USGS Topographic Map (Appendix B) Review of US Fish & Wildlife Service National Wetlands Inventory Map (Appendix B) Review of USDA NRCS Web Soil Survey Map (Appendix B)

8. Will the antenna tower or supporting structure be equipped with high intensity white lights and located in a residential neighborhood, as defined by the applicable zoning law?

Yes	No		Data Sources:
☐	☒		Construction Drawings (Appendix A) It is assumed that clients will not utilize high intensity white lights in residential areas

Lauren Sereno

Signature

March 29, 2019

Date

Lauren Sereno

Name

Trileaf Corporation

Company

NEPA Report

Introduction

Trileaf Corporation (Trileaf) completed a NEPA Review for the above-referenced Pyramid Network Services (Pyramid) site. The purpose of a NEPA Review is to comply with the National Environmental Policy Act (NEPA) of 1969. Trileaf performed extensive research by consulting with appropriate state and federal agencies and reviewing readily available published lists, files, data, and maps to provide our clients with a complete NEPA document. The following summarizes the scope of work Trileaf performed in accordance with the Federal Communications Commission's (FCC's) rules implementing NEPA (47 CFR Section 1.1307 (a) (1) through (8) to determine whether any of the below listed FCC special interest items would be affected by the proposed action. Referenced materials are included as attachments, where applicable and available.

Pyramid is proposing to construct a 475-foot-tall (488-feet-overall) self-support telecommunications tower and associated equipment within a proposed 80-foot by 80-foot (6,400-square-foot) lease area. An approximately 12-foot-wide access easement is proposed to extend north from the north side of the proposed telecommunications compound into a proposed service vehicle turn-around, and then east approximately 83.4 feet to an existing access drive. The proposed project site is located at approximately White Road, Bailey, Michigan 49303 at 43° 15' 45.6" North latitude and 85° 48' 27.7" West longitude.

During Trileaf's site reconnaissance, it was observed that the site is currently forested land with an existing access drive, and the areas surrounding the site are currently forested land and residences.

1. Will the facility be located in an officially designated wilderness area?

Trileaf reviewed the USGS 7.5-minute topographic map titled "Grant" Quadrangle, Michigan, and information from the National Wilderness Preservation System (NWPS) (*http://www.wilderness.net*) to determine if the site is located within an officially designated wilderness area.

There are currently sixteen (16) officially designated wilderness areas in the State of Michigan. The closest wilderness area to the project site is the Nordhouse Dunes Wilderness Area, which is located approximately 65 miles northwest of the project site.

Based on this review, the project site is not located within an officially designated wilderness area.

2. Will the facility be located in an officially designated wildlife preserve?

Trileaf reviewed the USGS 7.5-minute topographic map titled "Grant" Quadrangle, Michigan, and information from the National Wildlife Refuge (NWR) System (*http://www.fws.gov/refuges*) to determine if the site is located within an officially designated wildlife preserve or refuge.

Based on this review, the project site is not located within an officially designated wildlife preserve or refuge. A copy of the NWR System map is located in Appendix B.

3. Will the facility (i) affect listed threatened or endangered species or designated critical habitat; or (ii) likely jeopardize the continued existence of any proposed endangered or threatened species or likely result in the destruction or adverse modification of proposed critical habitats, as determined by the Secretary of the Interior pursuant to the Endangered Species Act of 1973?

The Endangered Species Act (ESA) of 1973 (16 U.S.C. §§ 1536), as amended, protects endangered and threatened species and the ecosystems upon which they depend. As interpreted and implemented by 50 CFR 402, Section 7 of the ESA directs Federal agencies, in consultation with and with the assistance of the Secretary of the Interior, to utilize their authorities to further the purposes of the ESA. It also requires every Federal agency to ensure that any action it authorizes, funds or carries out, is not likely to jeopardize the continued existence of any endangered or threatened species or results in the destruction or adverse modification of critical habitat.

On December 10, 2018, a Trileaf representative visited and photographed the project site to conduct an Informal Biological Assessment (IBA). In addition, Trileaf reviewed the United States Fish and Wildlife Service (USFWS) critical habitat information and determined that the site is not located within designated critical habitat. Based on the results of our assessment, impacts to listed and/or proposed, threatened and endangered species or critical habitats resulting from the proposed action are not anticipated. Therefore, Trileaf determined that the proposed project site "may affect, but is not likely to adversely affect" the species, their habitats, or designated critical habitats. Copies of the IBA and critical habitat review are located in Appendix D.

FEDERAL

On January 14, 2019, Trileaf reviewed the Section 7 Consultation guidance set forth by the USFWS – East Lansing, Michigan Ecological Services Field Office and on February 7, 2019, Trileaf submitted the project to the USFWS for review. On February 21, 2019, the USFWS responded that the project may adversely affect the Indiana bat (*Myotis sodalis*) due to tree removal during the summer months. On March 11, 2019, Dr. Allen Kurta, biological consultant, performed a habitat assessment for the Indiana bat on behalf of Trileaf. In his report, dated March 14, 2019, Dr. Kurta identified one (1) potential low-quality roost tree within the project area. On March 14, 2019, Trileaf submitted the results to the USFWS for review and on March 28, 2019, the USFWS provided concurrence with the results of the habitat assessment and findings in the IBA under one (1) condition below, along with recommendations on how to minimize potential negative effects on migratory birds. A copy of the habitat assessment and the USFWS' Section 7 guidance and correspondence is located in Appendix D.

Conditional Clearance: The USFWS requests an emergence survey be performed on the one (1) potential roost tree to demonstrate the absence of roosting bats on the landscape, prior to the removal of any trees at the site.

However, under the Note to paragraph (d) of 47 CFR Section 1.1307, the FCC requires that applicants prepare an Environmental Assessment (EA) that considers effects on migratory birds, for an otherwise categorically excluded action, when a proposed antenna structure will be over 450 feet above ground level (AGL).

4. Will the facility affect districts, sites, buildings, structures, or objects significant in American history, architecture, archeology, engineering, or culture that are listed, or are eligible for listing, in the National Register of Historic Places?

Trileaf referred to Section 106 of the National Historic Preservation Act (NHPA) of 1966 as amended (16 U.S.C. §§ 470 et seq.), the Advisory Council on Historic Preservation (ACHP) implementing regulations (36 CFR Part 800) and the Nationwide Programmatic Agreement (NPA) for Review of Effects on Historic

Properties for Certain Undertakings Approved by the Federal Communications Commission dated September 2004 to determine if the project site is contained in, on, or within the viewshed of a building, site, district, structure, or object, significant in American history, architecture, archaeology, engineering, or culture, that is listed, or eligible for listing on the National Registers of Historic Places, or located in or on an Indian Religious Site.

A search of the *National Historic Landmarks* (NHL), *National Register of Historic Places* (NRHP), *State Historic Preservation Office* (SHPO) files, and a field survey was conducted by Mr. Mark C. Branstner, Secretary of Interior-qualified Archaeologist contracted by Trileaf through Great Lakes Research, LLC, to identify any cultural resources within the area of direct effects and within a 1.5-mile radius for visual effects.

It was determined that there were no historic properties identified within the Area of Potential Effects (APE) for direct effects, and no historic properties identified within the APE for visual effects. Additionally, the identification process did not locate archaeological materials that would be directly affected, or sites that are of cultural or religious significance to Tribes/NHOs. Documentation of these reviews was submitted to the SHPO via Form 620 on December 20, 2018. The SHPO concurred that the proposed undertaking would have no direct or visual effects on historic properties in a response letter dated February 8, 2019. A copy of the SHPO concurrence letter, Form 620, and associated documents are located in Appendix E.

On December 7, 2018, Ms. Ruth Ann Bull, Office Administrator for Casnovia Township, and the Muskegon County Historical Society were notified of the proposed project and invited to comment on the proposed project's potential effect on Historic Properties as well as indicate whether they are interested in consulting further on the proposed project. Additionally, a legal notice regarding the proposed telecommunications tower construction was posted in the *Muskegon Chronicle* on December 16, 2018. No comments from the local government, historical society, or legal notice have been received by Trileaf. Copies of the correspondence and legal notice are located in Appendix E.

NATIONAL SCENIC TRAILS

On October 5, 1999, the Cellular Telecommunications Industry Association, Personal Communications Industry Association, Appalachian Trail Conference, American Hiking Society, and representative Managing and Supporting Trails Organizations (MSTOs) for the National Scenic Trails signed a resolution for the Siting of Wireless Telecommunications Facilities Near National Scenic Trails. This resolution states that if a wireless telecommunications or site management company plans a new or significantly expanded facility within one mile of a National Scenic Trail, it will notify the non-profit group that supports the trail.

In order to determine if the site is located within one mile of a National Scenic Trail, Trileaf reviewed information from the National Park Service (NPS) National Trails System created by the National Trails System Act of 1968.

Based on this review, the project site is not located within 1 mile of a National Scenic Trail. A copy of the trails map is located in Appendix B.

5. Will the facility affect any Indian religious sites?

Trileaf referred to Section 106 of the National Historic Preservation Act (NHPA) of 1966 as amended (16 U.S.C. §§ 470 et seq.), the Advisory Council on Historic Preservation (ACHP) implementing regulations (36 CFR Part 800) and the Nationwide Programmatic Agreement (NPA) for Review of Effects on Historic Properties for Certain Undertakings Approved by the Federal Communications Commission dated September 2004 to determine if the project site is located in or on an Indian Religious Site.

On December 4, 2018, Trileaf submitted project information through the Tower Construction Notification System (TCNS) to the FCC who initiated contact with the tribes on December 7, 2018. As of March 22, 2019, all tribes have confirmed clearance either directly or by default via the FCC referral process. Trileaf determined that the subject Property is not located on or near a Native American Religious or Sacred Site. However, if archaeological remains or resources are unearthed during construction activities, Trileaf recommends that the client stop construction and notify our office immediately. Tribal consultation documentation and associated correspondence is located in Appendix F.

Conditional Clearance: The Chippewa Cree Tribe of the Rocky Boy's Reservation requests a reconnaissance survey be performed by the Tribe's professional staff in the spring prior to any ground disturbance at the site.

6. Will the facility be located in a floodplain and not be placed at least one (1) foot above the base flood elevation of the floodplain?

Trileaf reviewed the relevant Federal Emergency Management Agency (FEMA) Flood Insurance Rate Map (FIRM) Panel #26121C0250D, dated October, 2017, to determine if the project was located within the 100-year floodplain.

Trileaf determined that the property is located in Zone X, areas determined to be outside the 500-year floodplain. Therefore, the project site is not located within a 100-year floodplain. A copy of the FEMA FIRM showing the project site location is located in Appendix B.

7. Will the construction of the facility involve significant change in surface features (e.g. wetland fill, deforestation, or water diversion)?

Trileaf determined through site reconnaissance, review of the relevant USGS 7.5-minute topographic map titled "Grant" Quadrangle, Michigan, and review of the relevant USFWS National Wetlands Inventory Map (*http://www.fws.gov/wetlands/Data/Mapper.html*) that there was the potential for federally designated wetlands on or in the immediate vicinity of the proposed project site.

In December of 2018, Timothy Bureau Consulting, LLC completed a wetland delineation of the project area on behalf of Trileaf. In the Regulatory Wetland Delineation Report, dated December 28, 2018, it was determined that a wetland does not exist on or in the immediate vicinity of the proposed project site.

In addition, Trileaf's site assessment did not reveal any evidence of potential wetlands or hydrophytic vegetation located on or in the immediate vicinity of the project site. A review of the United States Department of Agriculture (USDA) Soil Survey (*http://websoilsurvey.sc.egov.usda.gov*) did not indicate hydric soils at the project site.

Based on this review, no designated wetland areas were located within the vicinity of this project and no significant changes in surface features resulting from the proposed undertaking are anticipated. Copies of the soil map, wetlands map, and wetland delineation are located in Appendix B.

8. Zoning/High Intensity White Lights/Radio Frequency

As a standard practice, Pyramid does not construct facilities requiring high intensity white lights that are to be located in residentially zoned neighborhoods. According to Pyramid, high intensity white lights will not be used for towers less than 500 feet in height.

Conclusion

A NEPA Review of the proposed undertaking was performed by Trileaf Corporation in conformance with the FCC rules and regulations for implementing NEPA; 47 CFR 1.1301 to 1.1319.

Under the Note to paragraph (d) of 47 CFR Section 1.1307, the FCC requires that applicants prepare an Environmental Assessment (EA) that considers effects on migratory birds, for an otherwise categorically excluded action, when a proposed antenna structure will be over 450 feet above ground level (AGL).

Therefore, based on data obtained during the Site visit, consultation with government agencies, and a review of readily available information from other sources, the preparation and filing of an EA will be required for the proposed undertaking.

Qualifications

Lauren Sereno
Project Scientist

Clint Carlson
Project Manager

Appendix A

Site Plans

EA
Place Holder:

Construction Drawings

Please see Appendix 7.3

Appendix B

Site Maps

EA
Place Holder:

Site Maps

Please see Appendix 7.1

REGULATORY WETLAND DETERMINATION REPORT

PREPARED FOR:

Trileaf Environmental

Site #646371– Moore Park

Located at:
T10N, R13W, Section 13, Casnovia Township
Muskegon County, Michigan

PREPARED BY:

Timothy Bureau Consulting, LLC
Environmental Planning · Litigation Support · Wetlands, Lakes & Streams

Introduction

Timothy Bureau Consulting, LLC (TB Consulting) conducted a regulatory delineation relevant to wetlands, lakes, and streams at a parcel at Moore Park, Bailey, Michigan on December 27, 2018. The subject property is located in Section 13, T10N, R13W, Casnovia Township, Muskegon County, Michigan. See Figure 1 - Location Map below for detailed location.

Figure 1 - Location Map

Plant communities were identified and Wetland Determination Data Forms – Northcentral and Northeast Region were completed for each community type. There were no wetland communities found within the proposed project area. A site plan is attached at the end of this report (Appendix), which depicts the site and location of the proposed cell tower, access road, and locations of the data sample points.

In making this delineation, techniques outlined in the U.S. Army Corps of Engineers Regional Supplement to the Corps of Engineers Wetland Delineation Manual: Northcentral and Northeast Region (Version 2.0) were utilized. Our methodology included investigation and analysis of vegetation, soils, and hydrology.

Community Descriptions

Data Sample Points (DSPs) were taken within each community. Plant data, soil data, and hydrologic data was collected within each community type.

Upland Data Sample Points

Data Sample Point (DSP) A in a Forested Community

DSP A is made up of a forested community, on a hillside and near the top of the hill. This community is located in the proposed cell tower pad and a portion of the proposed access road. The plant species found in this area are typical of forested communities, like northern red oak (*Quercus rubra*) and white oak (*Quercus alba*). The dominant plant species are listed in Table 1.

Table 1. Dominant Plant Species at DSP A.

Scientific Name	Common Name	Indicator Status	Absolute % Cover
Fagus americana	American Beech	UPL	40 (tree stratum)
Fagus americana	American Beech	UPL	50 (shrub stratum)
Fagus americana	American Beech	UPL	50 (herbaceous stratum)
Acer saccharum	Sugar maple	FACU	25

According to the United States Department of Agriculture – Natural Resources Conservation District, Web Soil Survey, the soil type at DSP A is Onekama loam sand, 2 to 12 percent slopes. This soil is well drained. The soil profile on site was consistent with the profile described in the soil survey.

Table 2. Soil Profile at DSP A.

Depth	Matrix	Texture	Hydric Soil Indicators
0-8”	10YR 3/2	Silty loam	None
8-15”	10YR 4/4	Silty loam	None

No indicators of hydrology were found at DSP A. To be considered a wetland, three parameters need to be met. These parameters are: a dominance of wetland vegetation, presence of hydric soils, and wetland hydrology or indicators of hydrology. DSP A did not meet any of the three parameters indicating the presence of wetland. Therefore, DSP A is located in an upland community.

Access Road

The entire proposed access road was investigated for presence of wetlands. The majority of the proposed access road is already an existing paved road to the proposed cell tower pad. The road is about 20 feet wide and has vegetation bordering it similar to what was found around DSP A. In addition, some other upland plants typical of more disturbed areas were found, like, staghorn sumac (*Rhus typhina*) and black raspberry (*Rubus occidentalis*).

Regulated Areas

In Michigan, wetlands are regulated under Part 303, Wetlands Protection, of the Natural Resources and Environmental Protection Act (NREPA), 1994 PA 451, as amended. In accordance with Part 303, wetlands are regulated if they are any of the following:

- Connected to one of the Great Lakes or Lake St. Clair.
- Located within 1,000 feet of one of the Great Lakes or Lake St. Clair.
- Connected to an inland lake, river, or stream.
- Located within 500 feet of an inland lake, pond, river or stream.
- Not connected to one of the Great Lakes or Lake St. Clair, or an inland lake, pond, stream, or river, but are more than 5 acres in size.
- Not connected to one of the Great Lakes or Lake St. Clair, or an inland lake, pond, stream, or river, and less than 5 acres in size, but the DEQ has determined that these wetlands are essential to the preservation of the state's natural resources and has notified the property owner.

There are no wetland communities found within the proposed activity areas. Therefore, there are no wetlands which will be impacted by the project.

Summary

This report is a summary of our findings for the property. Soils and water table information contained in this report were obtained solely for the purposes of analyzing the wetlands and should not be used for engineering purposes.

Due to the dynamic nature of wetland resources, this wetland delineation is valid for three years. In the event that site conditions should change, this wetland delineation should be confirmed prior to construction.

Note this delineation is subject to review and concurrence by the Michigan Department of Environmental Quality, who holds the final legal authority to determine the presence and extent of regulated wetlands.

References

Lichvar, R.W., M. Butterwick, N.C. Melvin, and W.N. Kirchner. 2014. *The National Wetland Plant List*: 2014 Update of Wetland Ratings. Phytoneuron 2014-41: 1-42.

Michigan Department of Environmental Quality. State and Federal Wetland Regulations. http://www.michigan.gov/deq/0,4561,7-135-3313_3687-10801--,00.html. Accessed December 2018.

Newcomb, Lawrence. 1977. *Newcomb's Wildflower Guide*. New York, NY: Little, Brown, and Company.

U.S. Army Corps of Engineers. 2010. *Regional Supplement to the Corps of Engineers Wetland Delineation Manual: Northcentral and Northeast Region (Version 2.0)*. Vicksburg, MS: U.S. Army Engineer Research and Development Center. http://www.usace.army.mil/ Portals /2/docs/civilworks/regulatory/reg_supp/NCNE_suppv2.pdf

United States Department of Agriculture – Natural Resources Conservation District. Web Soil Survey. http://websoilsurvey.nrcs.usda.gov/app/. Accessed December 2018.

U.S. Fish and Wildlife Service National Wetlands Inventory. http://www.fws.gov/wetlands/ Wetlands-Mapper.html. Accessed December 2018.

Appendix

Site Plan

Data Forms

WETLAND DETERMINATION DATA FORM – Northcentral and Northeast Region

Project/Site: Trileaf-Moore Park City/County: Casnovia Twp, Muskegon Cty ___ Sampling Date: 12/27/18

Applicant/Owner: Moore Park State: MI Sampling Point: A

Investigator(s): Timothy Bureau, Tracey Weatherwax Section, Township, Range: 13, 10N, 13W

Landform (hillside, terrace, etc.): Hillside Local relief (concave, convex, none): none Slope (%): 12+

Subregion (LRR or MLRA): LRR L Lat: 43.262 Long: -85.807 Datum: NAD83

Soil Map Unit Name: Onekama loam, 2 to 12 percent slopes NWI classification: None

Are climatic / hydrologic conditions on the site typical for this time of year? Yes X No ___ (If no, explain in Remarks.)

Are Vegetation ___, Soil ___, or Hydrology ___ significantly disturbed? Are "Normal Circumstances" present? Yes X No ___

Are Vegetation ___, Soil ___, or Hydrology ___ naturally problematic? (If needed, explain any answers in Remarks.)

SUMMARY OF FINDINGS – Attach site map showing sampling point locations, transects, important features, etc.

Hydrophytic Vegetation Present?	Yes ___	No X	**Is the Sampled Area within a Wetland?** **Yes** ___ **No** X
Hydric Soil Present?	Yes ___	No X	
Wetland Hydrology Present?	Yes ___	No X	If yes, optional Wetland Site ID:

Remarks: (Explain alternative procedures here or in a separate report.)
DSP A represents the upland found in the cell pad and access road.

HYDROLOGY

Wetland Hydrology Indicators:

Primary Indicators (minimum of one is required; check all that apply)

- ___ Surface Water (A1)
- ___ High Water Table (A2)
- ___ Saturation (A3)
- ___ Water Marks (B1)
- ___ Sediment Deposits (B2)
- ___ Drift Deposits (B3)
- ___ Algal Mat or Crust (B4)
- ___ Iron Deposits (B5)
- ___ Inundation Visible on Aerial Imagery (B7)
- ___ Sparsely Vegetated Concave Surface (B8)
- ___ Water-Stained Leaves (B9)
- ___ Aquatic Fauna (B13)
- ___ Marl Deposits (B15)
- ___ Hydrogen Sulfide Odor (C1)
- ___ Oxidized Rhizospheres on Living Roots (C3)
- ___ Presence of Reduced Iron (C4)
- ___ Recent Iron Reduction in Tilled Soils (C6)
- ___ Thin Muck Surface (C7)
- ___ Other (Explain in Remarks)

Secondary Indicators (minimum of two required)

- ___ Surface Soil Cracks (B6)
- ___ Drainage Patterns (B10)
- ___ Moss Trim Lines (B16)
- ___ Dry-Season Water Table (C2)
- ___ Crayfish Burrows (C8)
- ___ Saturation Visible on Aerial Imagery (C9)
- ___ Stunted or Stressed Plants (D1)
- ___ Geomorphic Position (D2)
- ___ Shallow Aquitard (D3)
- ___ Microtopographic Relief (D4)
- ___ FAC-Neutral Test (D5)

Field Observations:

Surface Water Present?	Yes ___	No X	Depth (inches):	
Water Table Present?	Yes ___	No X	Depth (inches):	
Saturation Present? (includes capillary fringe)	Yes ___	No X	Depth (inches):	

Wetland Hydrology Present? **Yes** ___ **No** X

Describe Recorded Data (stream gauge, monitoring well, aerial photos, previous inspections), if available:

Remarks:

VEGETATION – Use scientific names of plants.

Sampling Point: A

Tree Stratum (Plot size: 30' radius)	Absolute % Cover	Dominant Species?	Indicator Status
1. *Fagus americana*	40	Yes	UPL
2. *Acer saccharum*	25	Yes	FACU
3. *Quercus rubra*	10	No	FACU
4. *Prunus serotina*	5	No	FACU
5. ~~*Pinus strobus*~~	~~5~~	~~No~~	~~FACU~~
6.			
7.			
	85	=Total Cover	

Sapling/Shrub Stratum (Plot size: 15' radius)			
1. *Fagus americana*	50	Yes	UPL
2. ~~*Lonicera tatarica*~~	~~10~~	~~No~~	~~FACU~~
3.			
4.			
5.			
6.			
7.			
	60	=Total Cover	

Herb Stratum (Plot size: 5' radius)			
1. *Fagus americana*	50	Yes	UPL
2. *Poa species*	10	No	
3. *Geranium maculatum*	15	No	FACU
4. *Rubus species*	5	No	
5. *Cyperus strigosus*	5	No	FACW
6.			
7.			
8.			
9.			
10.			
11.			
12.			
	85	=Total Cover	

Woody Vine Stratum (Plot size: 30' radius)			
1.			
2.			
3.			
4.			

Dominance Test worksheet:

Number of Dominant Species That Are OBL, FACW, or FAC: 0 (A)

Total Number of Dominant Species Across All Strata: 4 (B)

Percent of Dominant Species That Are OBL, FACW, or FAC: 0.0% (A/B)

Prevalence Index worksheet:

Total % Cover of:		Multiply by:	
OBL species	0	x 1 =	0
FACW species	5	x 2 =	10
FAC species	0	x 3 =	0
FACU species	70	x 4 =	280
UPL species	140	x 5 =	700
Column Totals:	215 (A)		990 (B)

Prevalence Index = B/A = 4.60

Hydrophytic Vegetation Indicators:

___1 - Rapid Test for Hydrophytic Vegetation

___2 - Dominance Test is >50%

___3 - Prevalence Index is ≤3.0[1]

___4 - Morphological Adaptations[1] (Provide supporting data in Remarks or on a separate sheet)

___Problematic Hydrophytic Vegetation[1] (Explain)

[1]Indicators of hydric soil and wetland hydrology must be present, unless disturbed or problematic.

Definitions of Vegetation Strata:

Tree– Woody plants 3 in. (7.6 cm) or more in diameter at breast height (DBH), regardless of height.

Sapling/shrub– Woody plants less than 3 in. DBH and greater than or equal to 3.28 ft (1 m) tall.

Herb– All herbaceous (non-woody) plants, regardless of size, and woody plants less than 3.28 ft tall.

Woody vines– All woody vines greater than 3.28 ft in height.

Hydrophytic Vegetation Present? **Yes** ___ **No** X

Remarks: (Include photo numbers here or on a separate sheet.)

SOIL

Sampling Point: A

Profile Description: (Describe to the depth needed to document the indicator or confirm the absence of indicators.)

Depth	Matrix		Redox Features					
(inches)	Color (moist)	%	Color (moist)	%	Type[1]	Loc[2]	Texture	Remarks
0-8	10YR 3/2						Loamy/Clayey	
8-15	10YR 4/4						Loamy/Clayey	

Hydric Soil Indicators:

- ___Histosol (A1)
- ___Histic Epipedon (A2)
- ___Black Histic (A3)
- ___Hydrogen Sulfide (A4)
- ___Stratified Layers (A5)
- ___Depleted Below Dark Surface (A11)
- ___Thick Dark Surface (A12)
- ___Sandy Mucky Mineral (S1)
- ___Sandy Gleyed Matrix (S4)
- ___Sandy Redox (S5)
- ___Stripped Matrix (S6)
- ___Dark Surface (S7)
- ___Polyvalue Below Surface (S8) (**LRR R, MLRA 149B**)
- ___Thin Dark Surface (S9) (**LRR R, MLRA 149B**)
- ___High Chroma Sands (S11) (**LRR K, L)**
- ___Loamy Mucky Mineral (F1) (**LRR K, L**)
- ___Loamy Gleyed Matrix (F2)
- ___Depleted Matrix (F3)
- ___Redox Dark Surface (F6)
- ___Depleted Dark Surface (F7)
- ___Redox Depressions (F8)
- ___Marl (F10) (**LRR K, L**)

Indicators for Problematic Hydric Soils[3]:

- ___2 cm Muck (A10) (**LRR K, L, MLRA 149B**)
- ___Coast Prairie Redox (A16) (**LRR K, L, R**)
- ___5 cm Mucky Peat or Peat (S3) (**LRR K, L, R**)
- ___Polyvalue Below Surface (S8) (**LRR K, L**)
- ___Thin Dark Surface (S9) (**LRR K, L**)
- ___Iron-Manganese Masses (F12) (**LRR K, L, R**)
- ___Piedmont Floodplain Soils (F19) (**MLRA 149B**)
- ___Mesic Spodic (TA6) (**MLRA 144A, 145, 149B**)
- ___Red Parent Material (F21)
- ___Very Shallow Dark Surface (TF12)
- ___Other (Explain in Remarks)

[3]Indicators of hydrophytic vegetation and wetland hydrology must be present, unless disturbed or problematic.

Restrictive Layer (if observed):

Type: _____

Depth (inches): _____

Hydric Soil Present? **Yes** _____ **No** X

Remarks:

Data form is revised from Northcentral and Northeast Regional Supplement Version 2.0 to reflect the NRCS Field Indicators of Hydric Soils version 7.0 March 2013 Errata. (http://soils.usda.gov/use/hydric)

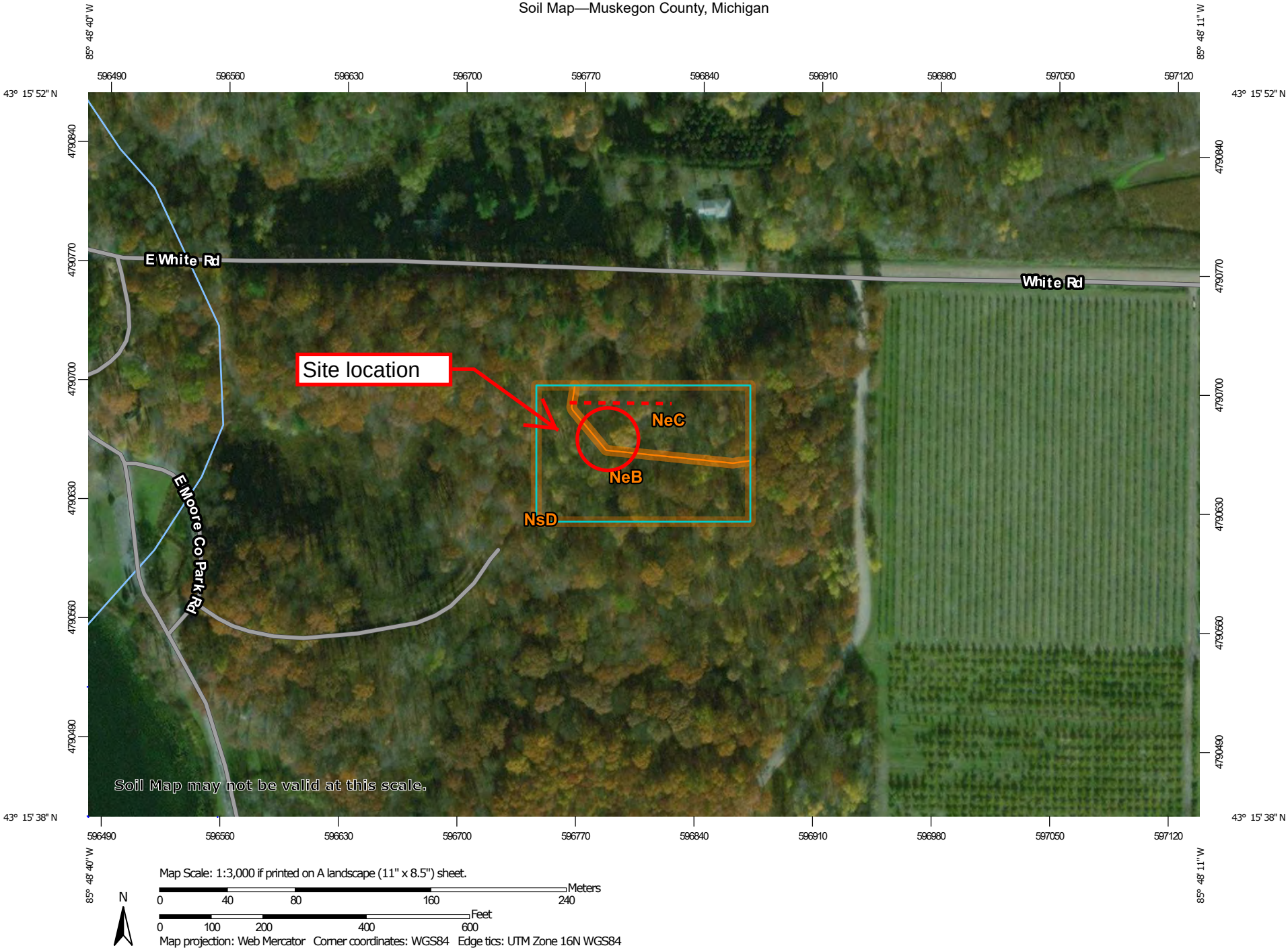

Map Scale: 1:3,000 if printed on A landscape (11" x 8.5") sheet.

N

Meters: 0 40 80 160 240

Feet: 0 100 200 400 600

Map projection: Web Mercator Corner coordinates: WGS84 Edge tics: UTM Zone 16N WGS84

MAP LEGEND

Area of Interest (AOI)

Area of Interest (AOI)

Soils

Soil Map Unit Polygons

Soil Map Unit Lines

Soil Map Unit Points

Special Point Features

Blowout

Borrow Pit

Clay Spot

Closed Depression

Gravel Pit

Gravelly Spot

Landfill

Lava Flow

Marsh or swamp

Mine or Quarry

Miscellaneous Water

Perennial Water

Rock Outcrop

Saline Spot

Sandy Spot

Severely Eroded Spot

Sinkhole

Slide or Slip

Sodic Spot

Spoil Area

Stony Spot

Very Stony Spot

Wet Spot

Other

Special Line Features

Water Features

Streams and Canals

Transportation

Rails

Interstate Highways

US Routes

Major Roads

Local Roads

Background

Aerial Photography

MAP INFORMATION

The soil surveys that comprise your AOI were mapped at 1:15,800.

Warning: Soil Map may not be valid at this scale.

Enlargement of maps beyond the scale of mapping can cause misunderstanding of the detail of mapping and accuracy of soil line placement. The maps do not show the small areas of contrasting soils that could have been shown at a more detailed scale.

Please rely on the bar scale on each map sheet for map measurements.

Source of Map: Natural Resources Conservation Service
Web Soil Survey URL:
Coordinate System: Web Mercator (EPSG:3857)

Maps from the Web Soil Survey are based on the Web Mercator projection, which preserves direction and shape but distorts distance and area. A projection that preserves area, such as the Albers equal-area conic projection, should be used if more accurate calculations of distance or area are required.

This product is generated from the USDA-NRCS certified data as of the version date(s) listed below.

Soil Survey Area: Muskegon County, Michigan
Survey Area Data: Version 14, Sep 6, 2018

Soil map units are labeled (as space allows) for map scales 1:50,000 or larger.

Date(s) aerial images were photographed: Dec 31, 2009—Jun 20, 2016

The orthophoto or other base map on which the soil lines were compiled and digitized probably differs from the background imagery displayed on these maps. As a result, some minor shifting of map unit boundaries may be evident.

Map Unit Legend

Map Unit Symbol	Map Unit Name	Acres in AOI	Percent of AOI
NeB	Onekama loam, Lake Michigan Lobe, 2 to 6 percent slopes	1.5	59.3%
NeC	Onekama loam, Lake Michigan Lobe, 6 to 12 percent slopes	1.0	40.6%
NsD	Nester soils, 12 to 25 percent slopes	0.0	0.1%
Totals for Area of Interest		**2.5**	**100.0%**

U.S. Fish and Wildlife Service
National Wildlife Refuge System Map

North

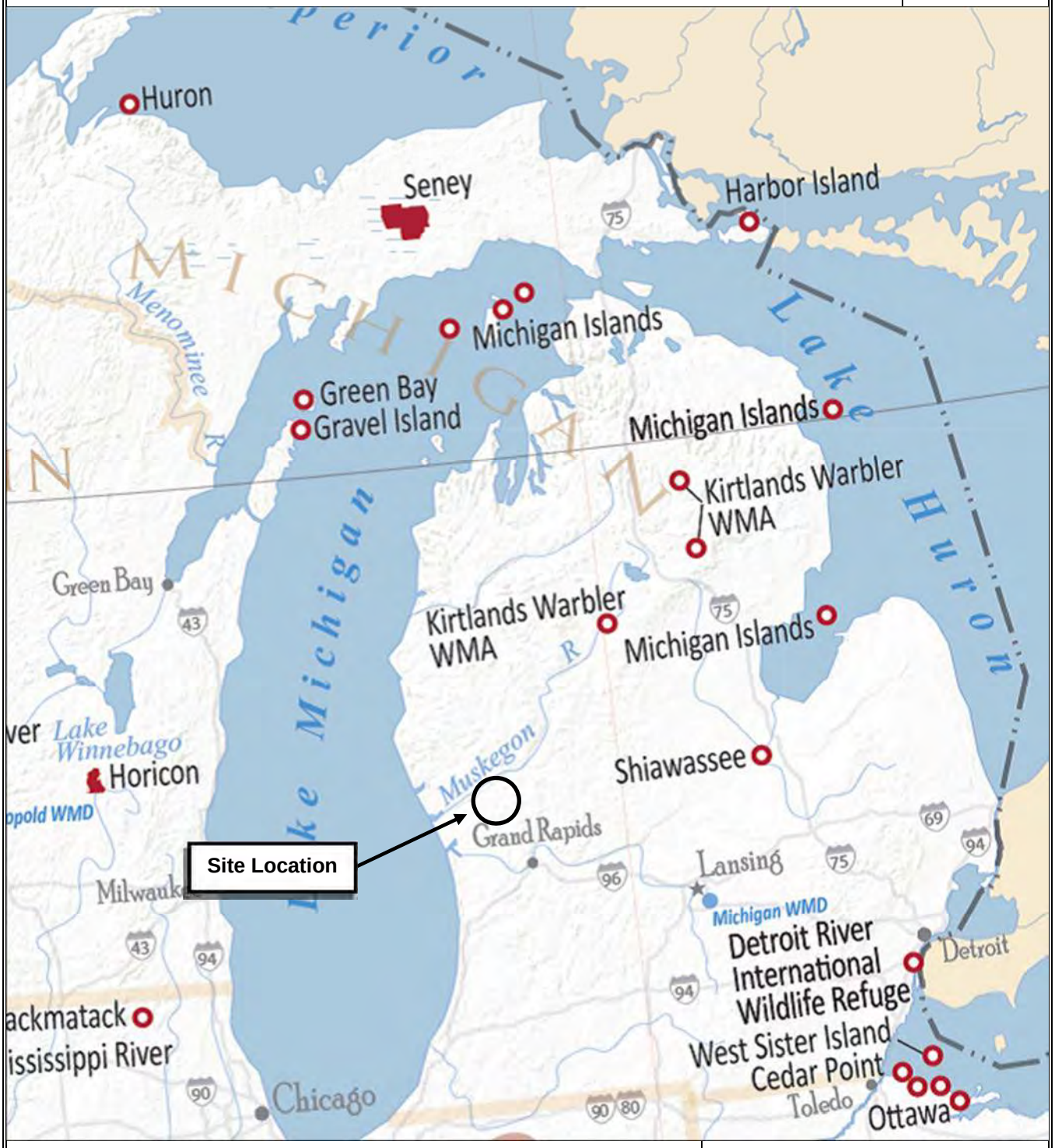

USFWS – Wildlife Refuge Map

Pyramid Network Services – Moore Park
White Road
Bailey, Michigan 49303

TRILEAF
ENVIRONMENTAL • ARCHITECTURE • ENGINEERING

North American Migration Flyways

North

Migratory Bird Flyways – Location Map

Pyramid Network Services – Moore Park
White Road
Bailey, Michigan 49303

TRILEAF
ENVIRONMENTAL • ARCHITECTURE • ENGINEERING

National Park Service
National Historic Trails and Scenic Routes

North

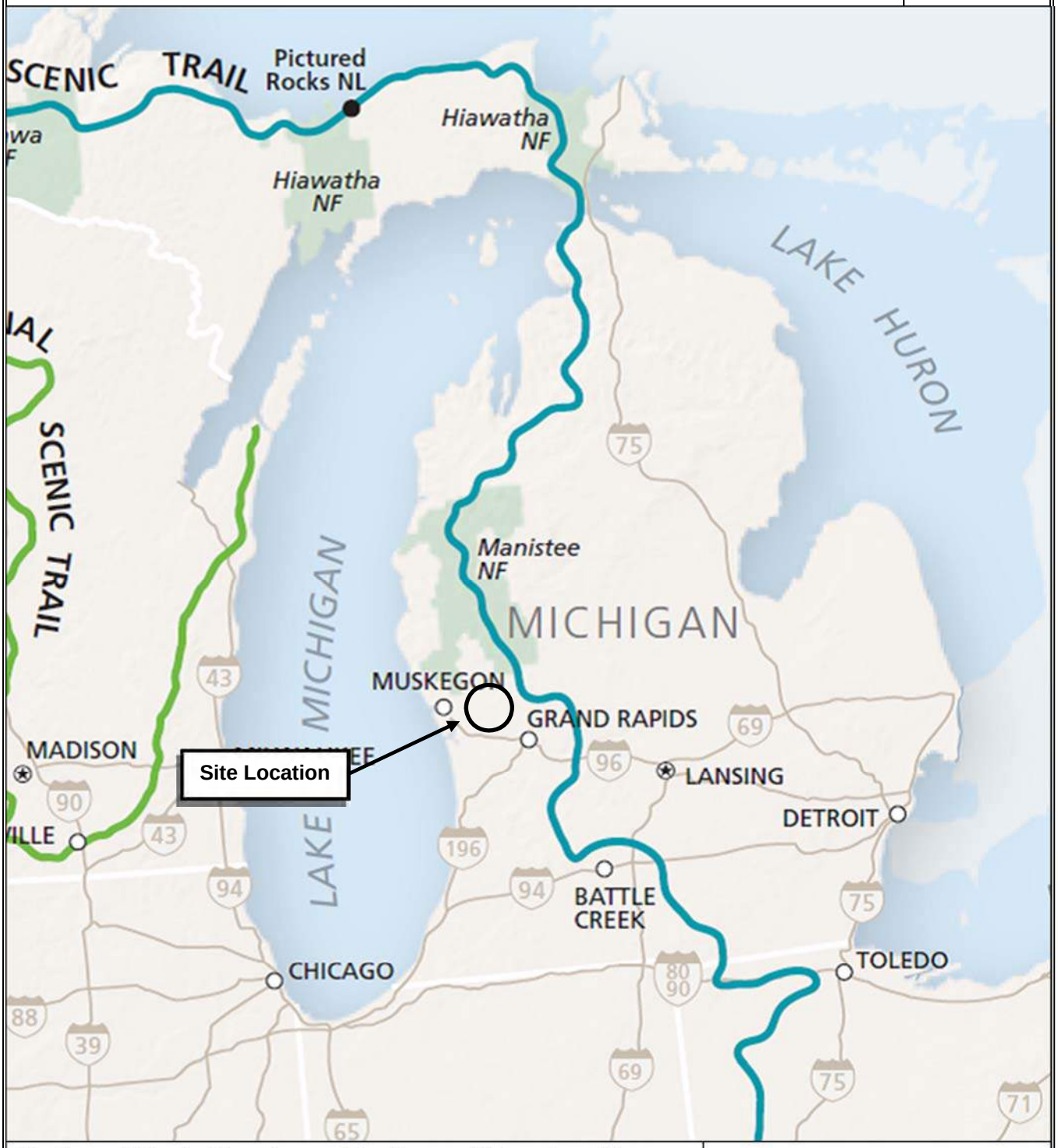

National Park Service – Trails and Routes Map

Pyramid Network Services – Moore Park
White Road
Bailey, Michigan 49303

TRILEAF
ENVIRONMENTAL • ARCHITECTURE • ENGINEERING

Bureau of Indian Affairs
Indian Reservation Map

North

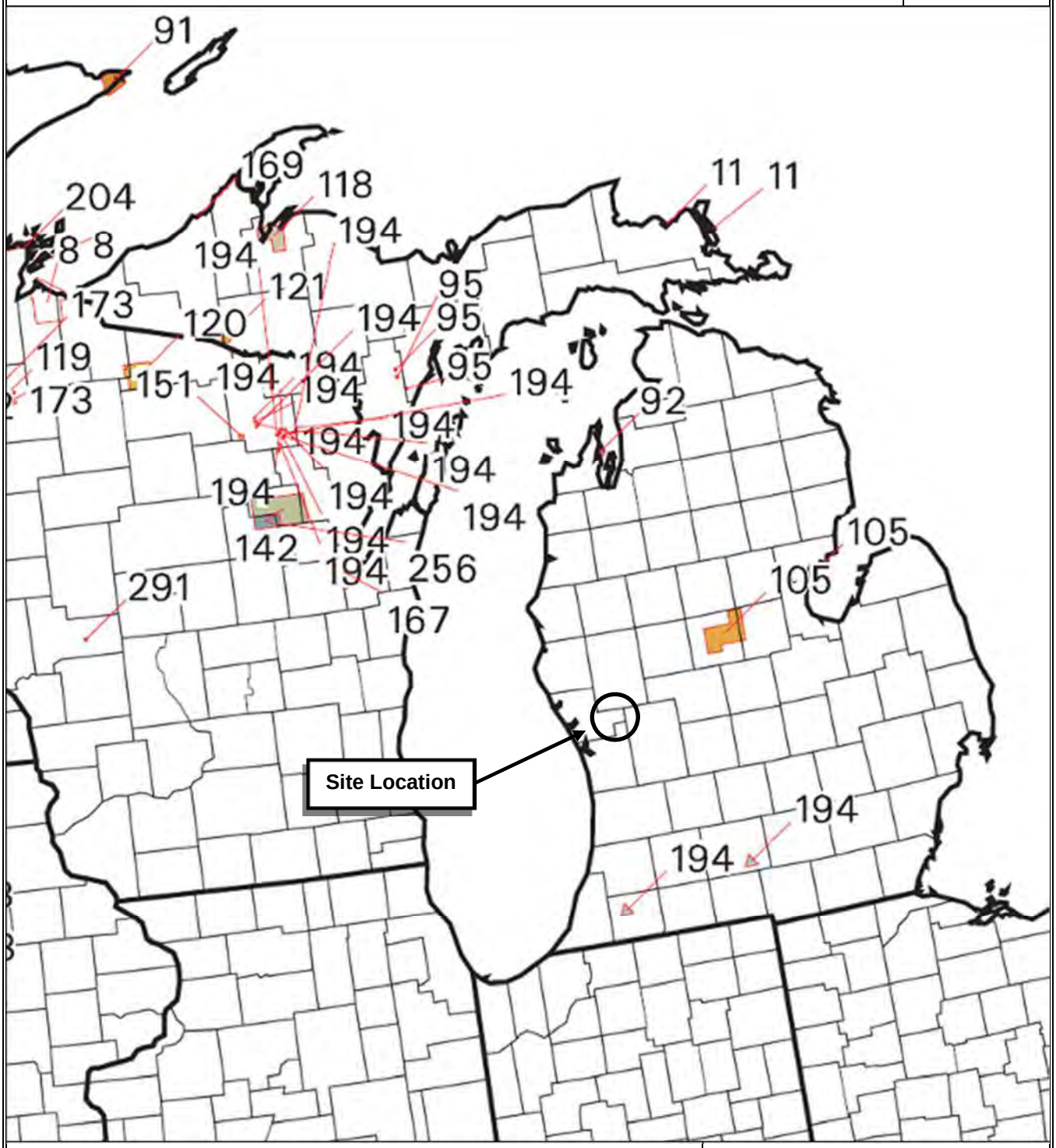

Bureau of Indian Affairs – Reservation Map

Pyramid Network Services – Moore Park
White Road
Bailey, Michigan 49303

TRILEAF
ENVIRONMENTAL • ARCHITECTURE • ENGINEERING

Appendix C

Site Photographs

EA
Place Holder:

Photographs

Please see Appendix 7.1

Appendix D

Documentation of Officially Designated Wilderness Areas, Wildlife Preserves and Endangered Species

TRILEAF™
ENVIRONMENTAL • ARCHITECTURE • ENGINEERING
1821 Walden Office Square, Suite 510, Schaumburg, Illinois 60173 - 630.227.0202 - www.trileaf.com

February 7, 2019

U.S. FISH AND WILDLIFE SERVICE
EAST LANSING MICHIGAN FIELD OFFICE
2651 Coolidge Road
East Lansing, MI 48823
Phone: (517) 351-2555
Email: EastLansing@fws.gov

RE: **Pyramid Network Services – Moore Park – Trileaf Project #646371**
White Road, Bailey, Michigan 49303
Muskegon County, Grant Quadrangle (USGS)
Latitude: 43° 15' 45.6" N, Longitude: 85° 48' 27.7" W

To Whom It May Concern:

Trileaf Corporation is in the process of completing a NEPA Review at the above referenced property. Our client proposes to construct a 475-foot-tall (488-feet-overall) self-support telecommunications tower and associated equipment within a proposed 80-foot by 80-foot (6,400-square-foot) lease area. An approximately 12-foot-wide access easement is proposed to extend north from the north side of the proposed telecommunications compound into a proposed service vehicle turnaround, and then east approximately 83.4 feet to an existing access drive. This site is currently forested land. A site location map, photos and biological assessment are enclosed to assist you in your review.

Our investigation includes determining if any of the following special resource areas are located at the site.

1. Is the site located in or on a wilderness area or wildlife preserve?
2. Is the site located within a principal migratory bird flyway?
3. Is the site located in or on a designated critical habitat?
4. Does the site sustain any species of plant or animal life that is designated or proposed as threatened or endangered?

As noted in the enclosed Informal Biological Assessment, Trileaf consulted the Northern Long-Eared Bat 4(d) Rule Streamlined Consultation Form and determined that there are no suitable Northern Long-Eared Bat (NLEB) hibernaculum in the vicinity or nearby to the proposed project area. Based on this finding, it is Trileaf's opinion that the proposed project may affect, but is not likely to adversely affect the NLEB. Additionally, the proposed project is not anticipated to likely adversely affect any other listed or proposed, threatened and endangered species, their designated critical habitat, or migratory birds.

Trileaf is requesting concurrence from the USFWS with the finding of "may affect, but not likely to adversely affect" to threatened and endangered species, critical habitat, or other special resources. If you need additional information or have any questions you may reach me at (630) 227-0202 or l.sereno@trileaf.com. Thank you for your assistance in this regard.

Sincerely,

Lauren Sereno
Project Scientist

Northern Long-Eared Bat 4(d) Rule Streamlined Consultation Form

Federal agencies should use this form for the optional streamlined consultation framework for the northern long-eared bat (NLEB). This framework allows federal agencies to rely upon the U.S. Fish and Wildlife Service's (USFWS) January 5, 2016, intra-Service Programmatic Biological Opinion (BO) on the final 4(d) rule for the NLEB for section 7(a)(2) compliance by: (1) notifying the USFWS that an action agency will use the streamlined framework; (2) describing the project with sufficient detail to support the required determination; and (3) enabling the USFWS to track effects and determine if reinitiation of consultation is required per 50 CFR 402.16.

This form is not necessary if an agency determines that a proposed action will have no effect to the NLEB or if the USFWS has concurred in writing with an agency's determination that a proposed action may affect, but is not likely to adversely affect the NLEB (i.e., the standard informal consultation process). Actions that may cause prohibited incidental take require separate formal consultation. Providing this information does not address section 7(a)(2) compliance for any other listed species.

Information to Determine 4(d) Rule Compliance:	**YES**	**NO**
1. Does the project occur wholly outside of the WNS Zone[1]?	☐	☒
2. Have you contacted the appropriate agency[2] to determine if your project is near known hibernacula or maternity roost trees?	☒	☐
3. Could the project disturb hibernating NLEBs in a known hibernaculum?	☐	☒
4. Could the project alter the entrance or interior environment of a known hibernaculum?	☐	☒
5. Does the project remove any trees within 0.25 miles of a known hibernaculum at any time of year?	☐	☒
6. Would the project cut or destroy known occupied maternity roost trees, or any other trees within a 150-foot radius from the maternity roost tree from June 1 through July 31.	☐	☒

You are eligible to use this form if you have answered yes to question #1 **or** yes to question #2 **and** no to questions 3, 4, 5 and 6. The remainder of the form will be used by the USFWS to track our assumptions in the BO.

Agency and Applicant[3] (Name, Email, Phone No.): Lauren Sereno, Trileaf Corporation, l.sereno@trileaf.com, 630-227-0202

Project Name: Moore Park

Project Location (include coordinates if known): 43.262666666667, -85.807694444444

Basic Project Description (provide narrative below or attach additional information):
The project consists of the construction of a 475-foot-tall (488-feet-overall) self-support telecommunications tower and associated equipment within a proposed 80-foot by 80-foot (6,400-square-foot) lease area. An approximately 12-foot-wide access easement is proposed to from the north side of the proposed telecommunications compound into a proposed service vehicle turn-around, and

[1] http://www.fws.gov/midwest/endangered/mammals/nleb/pdf/WNSZone.pdf
[2] See http://www.fws.gov/midwest/endangered/mammals/nleb/nhisites.html
[3] If applicable - only needed for federal actions with applicants (e.g., for a permit, etc.) who are party to the consultation.

then east approximately 83 feet to an existing access drive. The proposed tower site is approximately 868 feet above mean sea level.

General Project Information	YES	NO
Does the project occur within 0.25 miles of a known hibernaculum?	☐	☒
Does the project occur within 150 feet of a known maternity roost tree?	☐	☒
Does the project include forest conversion[4]? (if yes, report acreage below)	☒	☐
Estimated total acres of forest conversion	0.2	
If known, estimated acres[5] of forest conversion from April 1 to October 31	0.2	
If known, estimated acres of forest conversion from June 1 to July 31[6]	0	
Does the project include timber harvest? (if yes, report acreage below)	☐	☒
Estimated total acres of timber harvest	0	
If known, estimated acres of timber harvest from April 1 to October 31	0	
If known, estimated acres of timber harvest from June 1 to July 31	0	
Does the project include prescribed fire? (if yes, report acreage below)	☐	☒
Estimated total acres of prescribed fire	0	
If known, estimated acres of prescribed fire from April 1 to October 31	0	
If known, estimated acres of prescribed fire from June 1 to July 31	0	
Does the project install new wind turbines? (if yes, report capacity in MW below)	☐	☒
Estimated wind capacity (MW)	N/A	

Agency Determination:

By signing this form, the action agency determines that this project may affect the NLEB, but that any resulting incidental take of the NLEB is not prohibited by the final 4(d) rule.

If the USFWS does not respond within 30 days from submittal of this form, the action agency may presume that its determination is informed by the best available information and that its project responsibilities under 7(a)(2) with respect to the NLEB are fulfilled through the USFWS January 5, 2016, Programmatic BO. The action agency will update this determination annually for multi-year activities.

The action agency understands that the USFWS presumes that all activities are implemented as described herein. The action agency will promptly report any departures from the described activities to the appropriate USFWS Field Office. The action agency will provide the appropriate USFWS Field Office with the results of any surveys conducted for the NLEB. Involved parties will promptly notify the appropriate USFWS Field Office upon finding a dead, injured, or sick NLEB.

Signature: Sam Serena Date Submitted: 2/7/2019

[4] Any activity that temporarily or permanently removes suitable forested habitat, including, but not limited to, tree removal from development, energy production and transmission, mining, agriculture, etc. (see page 48 of the BO).
[5] If the project removes less than 10 trees and the acreage is unknown, report the acreage as less than 0.1 acre.
[6] If the activity includes tree clearing in June and July, also include those acreage in April to October.

Informal Biological Assessment

Pyramid Network Services
Project Name: Moore Park - Trileaf #646371
Latitude: 43-15-45.6 N; Longitude: 85-48-27.7 W

Trileaf performed an Informal Biological Assessment for the subject site. The purpose is to document whether the proposed undertaking will affect listed or proposed threatened or endangered species, designated critical habitats, wetlands, and migratory birds. A project description, site photographs and topographical site location maps are included in this report.

Proposed Project Description:
The Site is located at White Road, Bailey, Muskegon County, MI 49303, and consists of the construction of a 475-foot-tall (488-feet-overall) self-support telecommunications tower and associated equipment within a proposed 80-foot by 80-foot (6,400-square-foot) lease area. An approximately 12-foot-wide access easement is proposed to from the north side of the proposed telecommunications compound into a proposed service vehicle turn-around, and then east approximately 83 feet to an existing access drive. The proposed tower site is approximately 868 feet above mean sea level.

Site and Surrounding Habitat:
The Site is currently located within forested land. During the area reconnaissance, trees along the access road, and generally throughout the area were identified to be removed. A tree survey was not conducted, however using the provided photographs it is assumed that the stand is a mix of old deciduous trees with an average diameter at breast height (DBH) of 18 inches and very young undergrowth with an average DBH of 1-2 inches.

The surrounding habitat within a 0.5 mile radius of the proposed site consists predominantly of forested land. To the north is forested land, followed by White Rd, followed by a freshwater emergent wetland, followed by residential development, followed by forested land, followed by a freshwater pond, followed by more forested land, followed by a freshwater forested/shrub wetland, followed by a freshwater pond. To the east is forested land, followed by Westveer Ln, followed by farmland. To the south is forested land, followed by E Moore Co Park Rd, followed by forested land, followed by a freshwater emergent wetland, followed by Half Moon Lake. To the west is a freshwater emergent wetland, followed by a freshwater forested/shrub wetland, followed by a riverine, followed by Casnovia Township Park, followed by Half Moon Lake, followed by a freshwater forested/shrub wetland, followed by Mud Lake. The current habitat is not mapped as critical habitat, nor does it qualify as sufficient habitat for Federal or State listed species.

Wetlands:
Three parameters are necessary to be considered a wetland: a dominance of wetland vegetation, presence of hydric soils, and wetland hydrology or indicators of hydrology. Trileaf has completed a wetland delineation and concluded that the proposed lease area and access easement did not exhibit any of the three parameters necessary to be considered a wetland. Trileaf also reviewed the topographic map, soil composition, as

well as the National Wetlands Inventory Map to determine if the proposed lease area and easements would have an impact on any wetlands or require significant amounts of fill or grading. Trileaf determined that the site is not located in a recognized national wetland area.

Trileaf performed a field visit and identified surface water bodies. Using local maps in combination with an area reconnaissance the following water bodies have been identified in the table below:

Water Body Type	Water Body Name	Direction from Tower	Distance from Tower
Freshwater Emergent Wetland	Unnamed	SW	95 feet
Freshwater Emergent Wetland	Unnamed	NW	350 feet
Riverine	Unnamed	W	0.12 miles
Freshwater Forested/Shrub Wetland	Unnamed	SW	0.12 miles
Freshwater Emergent Wetland	Unnamed	SSW	0.12 miles
Freshwater Forested/Shrub Wetland	Unnamed	NE	0.14 miles
Freshwater Pond	Unnamed	NNE	0.14 miles
Freshwater Forested/Shrub Wetland	Unnamed	NW	0.16 miles
Lake	Half Moon Lake	SW	0.18 miles
Freshwater Forested/Shrub Wetland	Unnamed	ESE	0.25 miles
Freshwater Emergent Wetland	Unnamed	NNW	0.29 miles
Freshwater Emergent Wetland	Unnamed	NW	0.33 miles
Freshwater Forested/Shrub Wetland	Unnamed	NNW	0.34 miles
Freshwater Pond	Unnamed	NNE	0.36 miles
Freshwater Emergent Wetland	Unnamed	NE	0.37 miles
Freshwater Forested/Shrub Wetland	Unnamed	ESE	0.42 miles
Freshwater Pond	Unnamed	ESE	0.43 miles

Migratory Birds:
The proposed Site and design process for this project could not conform to all the USFWS recommendations to decrease potential effects on migratory birds. Therefore, it has included mitigating factors such as tower placement within minimally sensitive areas, avoiding placement near large water bodies, and eliminating the need for guy wires. While the proposed Site is located near the Mississippi flyway, our site investigation has determined that the project area is not located in an NWI mapped wetland, waterway, wildlife refuge, national wilderness area, native grassland, ridge-line, mountain top, coastline or area commonly known to have high incidences of fog or low clouds, where migratory birds may be found. Based upon the efforts undertaken during this IBA as well as the current data made available, we have concluded that this project

will not have a significant effect on migratory birds; however, the presence of migratory birds cannot be ruled out.

Soils:
According to the U.S. Soil Conservation Service Soil Survey of Muskegon County, Michigan, the Site is underlain by Onekama loam, Lake Michigan Lobe, 2 to 6 percent slopes and Onekama loam, Lake Michigan Lobe, 6 to 12 percent slopes. Onekama loam, Lake Michigan Lobe, 2 to 6 percent slopes consists of well drained soils that are formed from clayey till and/or loamy till and are found in moraines and till plains. The depth to the most restrictive feature is more than 80 inches. The depth to the water table is more than 80 inches. A typical profile of Onekama, 2 to 6 percent slopes soils consists of a surface layer of loam extending from 0 to 8 inches, subsurface layers of loam extending from 8 to 13 inches, clay extending from 13-28 inches, and silty clay extending from 28 to 80 inches. Onekama, 2 to 6 percent slopes soils have no frequency of flooding or ponding.

Onekama loam, Lake Michigan Lobe, 6 to 12 percent slopes consists of well drained soils that are formed from clayey till and/or loamy till and are found in till plains or moraines. The depth to the most restrictive feature is more than 80 inches. The depth to the water table is more than 80 inches. A typical profile of Onekama, 6 to 12 percent slopes soils consists of a surface layer of loam extending from 0 to 7 inches, subsurface layers of loam extending from 7 to 12 inches, clay extending from 12 to 27 inches, and silty clay extending from 27 to 80 inches. Onekama, 6 to 12 percent slopes soils have no frequency of flooding or ponding. Onekama loam, Lake Michigan Lobe, 6 to 12 percent slopes and Onekama loam, Lake Michigan Lobe, 2 to 6 percent slopes, are not considered hydric soils, and no hydrophytic vegetation or surface water was observed.

Threatened or Endangered Species:
Trileaf has researched the listed or proposed threatened or endangered species and designated critical habitat for the project area. This includes any such species that have been reported to exist within the action area where the project is located. The list of federally threatened or endangered species was acquired through the U.S. Fish and Wildlife Service's Information, Planning, and Consultation system (IPaC). The lease area is not located within an aquatic environment; therefore any obligate aquatic species should not be directly impacted by this project and are not included in the table below. A list of remaining species and site observations are summarized in the following table:

Species / Resource Name	Federal / State Status	Habitat Description	Recommendation of Effect	Notes / Documentation
Indiana Bat (*Myotis sodalis*)	Federal - Endangered	Roosts underneath bark, in cavities or crevices of trees along wooded stream corridors, forests and woods; hibernates in caves	May affect, not likely to adversely effect	Habitat assessment indicated potential habitat may be present, but none were present

Moore Park
Trileaf# 646371

Species / Resource Name	Federal / State Status	Habitat Description	Recommendation of Effect	Notes / Documentation
Eastern Massasauga *(Sistrurus catenatus)*	Federal - Threatened	Wet areas including wet prairies, marshes, and low areas along rivers and lakes	No effect	Habitat assessment indicated no potential habitat present
Karner Blue Butterfly *(Lycaeides melissa samuelis)*	Federal - Endangered	Oak savannas and pine barrens-requires wild lupine (*Lupinus perennis)* as host plant	No effect	Habitat assessment indicated no potential habitat present
Northeastern beach tiger beetle (*Cicindela dorsalis dorsalis*)	Federal- Threatened	Broad sandy beaches	No effect	Habitat assessment indicated no potential habitat present
Northern Long-Eared Bat (*Myotis septentrionalis*)	Federal - Threatened	Hibernates in caves and mines – swarming in surrounding wooded areas in autumn. During late spring and summer roosts and forages in upland forests	May affect, not likely to adversely effect	Habitat assessment indicated potential habitat may be present, but none were present
Piping Plover *(Charadrius melodus)*	Federal - Endangered	Sandy beaches along the coast, or dry, sandy areas inland	No effect	Habitat assessment indicated no potential habitat present
Pitcher's Thistle *(Cirsium pitcheri)*	Federal - Threatened	Stabilized dunes and blowout areas	No effect	Habitat assessment indicated no potential habitat present

Moore Park
Trileaf# 646371

Species / Resource Name	Federal / State Status	Habitat Description	Recommendation of Effect	Notes / Documentation
Red Knot (*Calidris canutus rufa)*	Federal-Threatened	Breeds in drier tundra areas. Outside of breeding season, found in intertidal, marine habitats, especially near coastal inlets, estuaries, and bays	No effect	Habitat assessment indicated no potential habitat present

In order to determine if suitable Northern Long-Eared Bat (NLEB) habitat may be impacted by the proposed tree removal, Trileaf consulted the Northern Long-Eared Bat 4(d) Rule Streamlined Consultation Form and determined that there are no suitable hibernaculum in the vicinity or nearby to the proposed project area. Based on this finding, it is Trileaf's opinion that the proposed project may affect, but is not likely to adversely affect the NLEB.

Conclusions:
Due to the presence of trees within the action area, potential habitat may be present for the Indiana bat and the northern long-eared bat. Tree removal will not take place nearby or in the vicinity of any known hibernaculum, and will not be impacting any potential wetlands. Therefore, the project may affect, but is not likely to adversely affect these species.

Based on the efforts undertaken during our IBA, project specifications and the current data made available, we have concluded that there is no potential for the proposed project to have a significant effect on listed or proposed, threatened and endangered species, their designated critical habitat, or migratory birds.

It should be noted that this informal biological assessment was conducted in accordance with the Scope of Work and does not constitute a Section 7 Biological Assessment under the Endangered Species Act (50 CFR Part 402.01).

Lauren Sereno
Natural Resource Specialist

Please refer to Appendix B for Site Maps

Please refer to Appendix C for Site Photographs

United States Department of the Interior

FISH AND WILDLIFE SERVICE
Michigan Ecological Services Field Office
2651 Coolidge Road Suite 101
East Lansing, MI 48823-6360
Phone: (517) 351-2555 Fax: (517) 351-1443
http://www.fws.gov/midwest/endangered/section7/s7process/step1.html

In Reply Refer To: January 31, 2019
Consultation Code: 03E16000-2019-SLI-0200
Event Code: 03E16000-2019-E-00482
Project Name: 646371

Subject: List of threatened and endangered species that may occur in your proposed project location, and/or may be affected by your proposed project

To Whom It May Concern:

The attached species list identifies any federally threatened, endangered, proposed and candidate species that may occur within the boundary of your proposed project or may be affected by your proposed project. The list also includes designated critical habitat if present within your proposed project area or affected by your project. This list is provided to you as the initial step of the consultation process required under section 7(c) of the Endangered Species Act, also referred to as Section 7 Consultation.

Section 7 of the Endangered Species Act of 1973 requires that actions authorized, funded, or carried out by Federal agencies not jeopardize federally threatened or endangered species or adversely modify designated critical habitat. To fulfill this mandate, Federal agencies (or their designated non-federal representative) must consult with the Fish and Wildlife Service if they determine their project may affect listed species or critical habitat.

There are several important steps in evaluating the effects of a project on listed species. Please use the species list provided and visit the U.S. Fish and Wildlife Service's Region 3 Section 7 Technical Assistance website athttp://www.fws.gov/midwest/endangered/section7/s7process/index.html. This website contains step-by-step instructions to help you determine if your project may affect listed species and lead you through the section 7 consultation process.

Under 50 CFR 402.12(e) (the regulations that implement section 7 of the Endangered Species Act), the accuracy of this species list should be verified after 90 days. You may verify the list by visiting the ECOS-IPaC website (http://ecos.fws.gov/ipac/) at regular intervals during project planning and implementation and completing the same process you used to receive the attached list.

For all wind energy projects and projects that include installing towers that use guy wires or are over 200 feet in height, please contact this field office directly for assistance, even if no federally listed plants, animals or critical habitat are present within your proposed project area or may be affected by your proposed project.

Migratory Birds: In addition to responsibilities to protect threatened and endangered species under the Endangered Species Act (ESA), there are additional responsibilities under the Migratory Bird Treaty Act (MBTA) and the Bald and Golden Eagle Protection Act (BGEPA) to protect native birds from project-related impacts. Any activity, intentional or unintentional, resulting in take of migratory birds, including eagles, is prohibited unless otherwise permitted by the U.S. Fish and Wildlife Service (50 C.F.R. Sec. 10.12 and 16 U.S.C. Sec. 668(a)). For more information regarding these Acts see http://www.fws.gov/migratorybirds/RegulationsandPolicies.html.

Although no longer listed under the Endangered Species Act, bald eagles are protected under the Bald and Golden Eagle Protection Act (16 U.S.C. 668 et seq.) and Migratory Bird Treaty Act (16 U.S.C. 703 et seq), as are golden eagles. Projects affecting these species may require measures to avoid harming eagles or may require a permit. If your project is near an eagle nest or winter roost area, see our Eagle Permits website at http://www.fws.gov/midwest/midwestbird/EaglePermits/index.html to help you avoid impacting eagles or determine if a permit may be necessary.

The MBTA has no provision for allowing take of migratory birds that may be unintentionally killed or injured by otherwise lawful activities. It is the responsibility of the project proponent to comply with these Acts by identifying potential impacts to migratory birds and eagles within applicable NEPA documents (when there is a federal nexus) or a Bird/Eagle Conservation Plan (when there is no federal nexus). Proponents should implement conservation measures to avoid or minimize the production of project-related stressors or minimize the exposure of birds and their resources to the project-related stressors. For more information on avian stressors and recommended conservation measures see http://www.fws.gov/migratorybirds/CurrentBirdIssues/Hazards/BirdHazards.html.

In addition to MBTA and BGEPA, Executive Order 13186: Responsibilities of Federal Agencies to Protect Migratory Birds, obligates all Federal agencies that engage in or authorize activities that might affect migratory birds, to minimize those effects and encourage conservation measures that will improve bird populations. Executive Order 13186 provides for the protection of both migratory birds and migratory bird habitat. For information regarding the implementation of Executive Order 13186, please visit http://www.fws.gov/migratorybirds/AboutUS.html.

We appreciate your concern for threatened and endangered species. Please include the Consultation Tracking Number in the header of this letter with any request for consultation or correspondence about your project that you submit to our office.

Attachment(s):

- Official Species List
- USFWS National Wildlife Refuges and Fish Hatcheries

- Migratory Birds
- Wetlands

Official Species List

This list is provided pursuant to Section 7 of the Endangered Species Act, and fulfills the requirement for Federal agencies to "request of the Secretary of the Interior information whether any species which is listed or proposed to be listed may be present in the area of a proposed action".

This species list is provided by:

Michigan Ecological Services Field Office
2651 Coolidge Road Suite 101
East Lansing, MI 48823-6360
(517) 351-2555

Project Summary

Consultation Code: 03E16000-2019-SLI-0200

Event Code: 03E16000-2019-E-00482

Project Name: 646371

Project Type: COMMUNICATIONS TOWER

Project Description: The Site is located at White Road, Bailey, Michigan 49303, and consists of the construction of a 475-foot-tall (488-feet-overall) self-support telecommunications tower and associated equipment within a proposed 80-foot by 80-foot (6,400-square-foot) lease area. An approximately 12-foot-wide access easement is proposed to from the north side of the proposed telecommunications compound into a proposed service vehicle turn-around, and then east approximately 83 feet to an existing access drive. The proposed tower site is approximately 868 feet above mean sea level.

Project Location:

Approximate location of the project can be viewed in Google Maps: https://www.google.com/maps/place/43.26269255544415N85.80770532877389W

Counties: Muskegon, MI

Endangered Species Act Species

There is a total of 7 threatened, endangered, or candidate species on this species list.

Species on this list should be considered in an effects analysis for your project and could include species that exist in another geographic area. For example, certain fish may appear on the species list because a project could affect downstream species. Note that 2 of these species should be considered only under certain conditions.

IPaC does not display listed species or critical habitats under the sole jurisdiction of NOAA Fisheries[1], as USFWS does not have the authority to speak on behalf of NOAA and the Department of Commerce.

See the "Critical habitats" section below for those critical habitats that lie wholly or partially within your project area under this office's jurisdiction. Please contact the designated FWS office if you have questions.

---

1. NOAA Fisheries, also known as the National Marine Fisheries Service (NMFS), is an office of the National Oceanic and Atmospheric Administration within the Department of Commerce.

Mammals

NAME	STATUS
Indiana Bat Myotis sodalis There is final critical habitat for this species. Your location is outside the critical habitat. Species profile: https://ecos.fws.gov/ecp/species/5949 General project design guidelines: https://ecos.fws.gov/ipac/guideline/design/population/1/office/31410.pdf	Endangered
Northern Long-eared Bat Myotis septentrionalis No critical habitat has been designated for this species. Species profile: https://ecos.fws.gov/ecp/species/9045 General project design guidelines: https://ecos.fws.gov/ipac/guideline/design/population/10043/office/31410.pdf	Threatened

Birds

NAME	STATUS
Piping Plover Charadrius melodus Population: [Great Lakes watershed DPS] - Great Lakes, watershed in States of IL, IN, MI, MN, NY, OH, PA, and WI and Canada (Ont.) There is final critical habitat for this species. Your location is outside the critical habitat. Species profile: https://ecos.fws.gov/ecp/species/6039	Endangered
Red Knot Calidris canutus rufa No critical habitat has been designated for this species. This species only needs to be considered under the following conditions: ▪ Only actions that occur along coastal areas during the Red Knot migratory window of MAY 1 - SEPTEMBER 30. Species profile: https://ecos.fws.gov/ecp/species/1864	Threatened

Reptiles

NAME	STATUS
Eastern Massasauga (=rattlesnake) Sistrurus catenatus No critical habitat has been designated for this species. This species only needs to be considered under the following conditions: ▪ All Projects: Project is Within EMR Range Species profile: https://ecos.fws.gov/ecp/species/2202 General project design guidelines: https://ecos.fws.gov/ipac/guideline/design/population/7800/office/31410.pdf	Threatened

Insects

NAME	STATUS
Karner Blue Butterfly Lycaeides melissa samuelis There is proposed critical habitat for this species. The location of the critical habitat is not available. Species profile: https://ecos.fws.gov/ecp/species/6656	Endangered

Flowering Plants

NAME	STATUS
Pitcher's Thistle Cirsium pitcheri No critical habitat has been designated for this species. Species profile: https://ecos.fws.gov/ecp/species/8153	Threatened

Critical habitats

THERE ARE NO CRITICAL HABITATS WITHIN YOUR PROJECT AREA UNDER THIS OFFICE'S JURISDICTION.

USFWS National Wildlife Refuge Lands And Fish Hatcheries

Any activity proposed on lands managed by the National Wildlife Refuge system must undergo a 'Compatibility Determination' conducted by the Refuge. Please contact the individual Refuges to discuss any questions or concerns.

THERE ARE NO REFUGE LANDS OR FISH HATCHERIES WITHIN YOUR PROJECT AREA.

Migratory Birds

Certain birds are protected under the Migratory Bird Treaty Act[1] and the Bald and Golden Eagle Protection Act[2].

Any person or organization who plans or conducts activities that may result in impacts to migratory birds, eagles, and their habitats should follow appropriate regulations and consider implementing appropriate conservation measures, as described below.

---

1. The Migratory Birds Treaty Act of 1918.
2. The Bald and Golden Eagle Protection Act of 1940.
3. 50 C.F.R. Sec. 10.12 and 16 U.S.C. Sec. 668(a)

THERE ARE NO FWS MIGRATORY BIRDS OF CONCERN WITHIN THE VICINITY OF YOUR PROJECT AREA.

Migratory Birds FAQ

Tell me mor e about conservation measur es I can implement to avoid or minimize impacts to migratory birds.
Nationwide Conservation Measures describes measures that can help avoid and minimize impacts to all birds at any location year round. Implementation of these measures is particularly important when birds are most likely to occur in the project area. When birds may be breeding in the area, identifying the locations of any active nests and avoiding their destruction is a very helpful impact minimization measure. To see when birds are most likely to occur and be breeding in your project area, view the Probability of Presence Summary. Additional measures and/or permits may be advisable depending on the type of activity you are conducting and the type of infrastructure or bird species present on your project site.

What does IPaC use to generate the migratory birds potentially occurring in my specified location?
The Migratory Bird Resource List is comprised of USFWS Birds of Conservation Concern (BCC) and other species that may warrant special attention in your project location.

The migratory bird list generated for your project is derived from data provided by the Avian Knowledge Network (AKN). The AKN data is based on a growing collection of survey, banding, and citizen science datasets and is queried and filtered to return a list of those birds reported as occurring in the 10km grid cell(s) which your project intersects, and that have been identified as warranting special attention because they are a BCC species in that area, an eagle (Eagle Act requirements may apply), or a species that has a particular vulnerability to offshore activities or development.

Again, the Migratory Bird Resource list includes only a subset of birds that may occur in your project area. It is not representative of all birds that may occur in your project area. To get a list of all birds potentially present in your project area, please visit the E-bird Explore Data Tool.

What does IPaC use to generate the probability of presence graphs for the migratory birds potentially occurring in my specified location?
The probability of presence graphs associated with your migratory bird list are based on data provided by the Avian Knowledge Network (AKN). This data is derived from a growing collection of survey, banding, and citizen science datasets .

Probability of presence data is continuously being updated as new and better information becomes available. To learn more about how the probability of presence graphs are produced and how to interpret them, go the Probability of Presence Summary and then click on the "Tell me about these graphs" link.

How do I know if a bird is breeding, wintering, migrating or present year-round in my project area?
To see what part of a particular bird's range your project area falls within (i.e. breeding, wintering, migrating or year-round), you may refer to the following resources: The Cornell Lab of Ornithology All About Birds Bird Guide, or (if you are unsuccessful in locating the bird of interest there), the Cornell Lab of Ornithology Neotropical Birds guide. If a bird on your migratory bird species list has a breeding season associated with it, if that bird does occur in your project area, there may be nests present at some point within the timeframe specified. If "Breeds elsewhere" is indicated, then the bird likely does not breed in your project area.

What are the levels of concern for migratory birds?
Migratory birds delivered through IPaC fall into the following distinct categories of concern:

1. "BCC Rangewide" birds are Birds of Conservation Concern (BCC) that are of concern throughout their range anywhere within the USA (including Hawaii, the Pacific Islands, Puerto Rico, and the Virgin Islands);
2. "BCC - BCR" birds are BCCs that are of concern only in particular Bird Conservation Regions (BCRs) in the continental USA; and
3. "Non-BCC - Vulnerable" birds are not BCC species in your project area, but appear on your list either because of the Eagle Act requirements (for eagles) or (for non-eagles) potential susceptibilities in offshore areas from certain types of development or activities (e.g. offshore energy development or longline fishing).

Although it is important to try to avoid and minimize impacts to all birds, efforts should be made, in particular, to avoid and minimize impacts to the birds on this list, especially eagles and BCC species of rangewide concern. For more information on conservation measures you can implement to help avoid and minimize migratory bird impacts and requirements for eagles, please see the FAQs for these topics.

Details about birds that are potentially affected by offshore projects

For additional details about the relative occurrence and abundance of both individual bird species and groups of bird species within your project area off the Atlantic Coast, please visit the Northeast Ocean Data Portal. The Portal also offers data and information about other taxa besides birds that may be helpful to you in your project review. Alternately, you may download the bird model results files underlying the portal maps through the NOAA NCCOS Integrative Statistical Modeling and Predictive Mapping of Marine Bird Distributions and Abundance on the Atlantic Outer Continental Shelf project webpage.

Bird tracking data can also provide additional details about occurrence and habitat use throughout the year, including migration. Models relying on survey data may not include this information. For additional information on marine bird tracking data, see the Diving Bird Study and the nanotag studies or contact Caleb Spiegel or Pam Loring.

What if I have eagles on my list?
If your project has the potential to disturb or kill eagles, you may need to obtain a permit to avoid violating the Eagle Act should such impacts occur.

Proper Interpretation and Use of Your Migratory Bird Report
The migratory bird list generated is not a list of all birds in your project area, only a subset of birds of priority concern. To learn more about how your list is generated, and see options for identifying what other birds may be in your project area, please see the FAQ “What does IPaC use to generate the migratory birds potentially occurring in my specified location”. Please be aware this report provides the “probability of presence” of birds within the 10 km grid cell(s) that overlap your project; not your exact project footprint. On the graphs provided, please also look carefully at the survey effort (indicated by the black vertical bar) and for the existence of the “no data” indicator (a red horizontal bar). A high survey effort is the key component. If the survey effort is high, then the probability of presence score can be viewed as more dependable. In contrast, a low survey effort bar or no data bar means a lack of data and, therefore, a lack of certainty about presence of the species. This list is not perfect; it is simply a starting point for identifying what birds of concern have the potential to be in your project area, when they might be there, and if they might be breeding (which means nests might be present). The list helps you know what to look for to confirm presence, and helps guide you in knowing when to implement conservation measures to avoid or minimize potential impacts from your project activities, should presence be confirmed. To learn more about conservation measures, visit the FAQ “Tell me about conservation measures I can implement to avoid or minimize impacts to migratory birds” at the bottom of your migratory bird trust resources page.

Wetlands

Impacts to NWI wetlands and other aquatic habitats may be subject to regulation under Section 404 of the Clean Water Act, or other State/Federal statutes.

For more information please contact the Regulatory Program of the local U.S. Army Corps of Engineers District.

Please note that the NWI data being shown may be out of date. We are currently working to update our NWI data set. We recommend you verify these results with a site visit to determine the actual extent of wetlands on site.

THERE ARE NO WETLANDS WITHIN YOUR PROJECT AREA.

Assessment of Habitat for the Endangered Indiana Bat, at a Site for a Proposed Telecommunications Tower, near Bailey, Muskegon County, Michigan

A Report to
Trileaf Corporation

By
Dr. Allen Kurta
Biological Consultant

14 March 2019

Table of Contents

Summary 3
Introduction 4
Background 4
Biology of the Indiana Bat in Summer 4
Proposed Action 6
Previous Records of Indiana Bats near the Proposed Action 6
Purpose of Study 7
Methods 7
Results and Discussion 8
Conclusions and Recommendation 9
References 11
Figures 15

Summary

Motorola Solutions, Inc., intends to construct a 475-feet-tall telecommunications tower, south of the unincorporated community of Bailey, in Casnovia Township, Muskegon County, Michigan. Construction would require removal of trees on only about 0.5 acre, within a county park. Although the surrounding landscape appears suitable for Indiana bats, the specific patch of woods where the tower will be constructed is quite small and contains only one potential roost tree of very low quality. Removal of this one low-quality tree would not have an adverse effect on the species. Nevertheless, I recommend that this tree be removed in winter (1 November–31 March), when the bats are hibernating elsewhere, to avoid any possibility of direct take by felling an occupied tree.

Introduction

Background

The Indiana bat is a small 6–10 gram, insectivorous bat that ranges across much of the eastern United States. This species hibernates in a limited number of mines and caves, primarily in the karst regions of Missouri, Kentucky, and Indiana (USFWS, 2007). Some hibernacula contain up to 100,000 Indiana bats, and at one time, more than 90% of the known population hibernated in just three caves and one mine. Known populations declined drastically during the 1960s because of disturbance while hibernating and because human alteration of some hibernation sites modified the cave microclimate (Richter et al., 1993). This lack of suitable hibernacula (critical habitat) and severe declines in size of wintering populations were the reasons that the Indiana bat was placed on the federal list of endangered species in 1967 (Humphrey, 1978; USFWS, 2007). Although the rangewide population stabilized by the early 2000s, the arrival of a fungal disease from Europe, called white-nose syndrome, negated 40-years of conservation efforts, and the population is again in serious decline (Blehart et al., 2009; Frick et al., 2010; Turner et al., 2012). Indiana bats likely will face local or regional extirpation within decades and perhaps total extinction over a somewhat longer period because of this introduced disease (Thogmartin et al., 2013).

Biology of the Indiana Bat in Summer

During warm-weather months, male Indiana bats generally are solitary, roosting in trees or perhaps caves on occasion (Carter et al., 2001; Hall, 1962). Female Indiana bats, in contrast, gather in small maternity colonies, usually containing less than 100 adults, at sites where they give birth and raise their single young to maturity (Kurta, 2005; Silvis et al., 2016). Indiana bats typically roost underneath the loose bark of dead trees, but sometimes, the bark of living trees, such as shagbark hickories, is used. Maternity colonies occasionally occupy narrow crevices within the trunk of a dead tree, but unlike many other species of bat, Indiana bats do not form maternity colonies in tree hollows (cavities) that were created by rot or woodpeckers. A colony of Indiana bats may use over 20 roost trees in a single season (Callahan et al., 1997; Carter, 2003;

Kurta, 2005; Kurta et al., 1996, 2002; Silvis et al., 2016). However, one or two trees (primary roosts) usually shelter most colony members at any one time, whereas other trees (alternate roosts) are used by a few animals for only a few days at a time, before they return to the primary roost. Although roost trees most often occur in clumps, with different trees only 1 to 100 yards apart, alternate roosts may be separated by a few miles. Preferred landscapes typically are only moderately forested (Silvis et al., 2016).

Types of dead trees that are most frequently used as roosts are ashes, elms, hickories, maples, poplars (including cottonwood), and oaks (Kurta, 2005). Preferred trees are not obstructed by vines or small branches, are in early-to-mid stages of decay so that the wood is still firm and dry, and receive large amounts of sunlight, presumably creating a warm microclimate for this essentially southern species. Maternity colonies concentrate their roosting in large trees, particularly those that are greater than 9 inches (22 cm) in diameter (Gardner et al., 1991); the average diameter of trees that are used is 18 inches (45 cm; Kurta, 2005). Roosts are typically located in forests with low-to-moderate subcanopy, and are often in or near riparian woodlands or other forested wetlands (Kurta et al., 1993a, 1993b, 1996, 2002; Silvis et al., 2016). Indiana bats often use the same tree in multiple years, moving from tree to tree as once-suitable roosts lose bark, decay, and fall over (Kurta et al., 2002), Nevertheless, Indiana bats are highly loyal to their home range, and summer colonies can persist in a local area for at least 35 years, if suitable habitat remains (Mellos et al., 2014).

Data from radio-tracking and light-tagging suggest that these insectivorous bats often forage along edges, in woodland openings, and in areas of open forest, above and below the canopy, although they occasionally hunt in more open habitats (Bergeson et al., 2013; Gardner et al., 1991; Murray and Kurta, 2004; Sparks et al., 2005a, 2005b). Diet primarily consists of flies, caddisflies, moths, and beetles (Kurta and Whitaker, 1998; Murray and Kurta, 2002). Foraging areas are often 1.25 to 2.5 miles (2–4 km) from a roost tree and occasionally farther (Gardner et al., 1991; Murray and Kurta, 2004; Sparks et al., 2005a, 2005b; Silvis et al., 2016). In Michigan, Indiana bats apparently prefer not to cross large, open expanses of land and travel considerable distances out of their way to follow wooded corridors, such as tree-lined fence rows, between roosts and other sites that are used for foraging, drinking, or roosting (Murray

and Kurta, 2004; Winhold et al., 2005; Sparks et al., 2005b). Drinking water is most likely obtained on the wing, with the bat dipping its mouth into a pool of water as the animal flies (Taylor and Tuttle, 2007). About 2–4% of bats mist-netted in the southern three rows of counties of Michigan are Indiana bats (Kurta, 1980a, Winhold and Kurta, 2008), although that percentage is likely now lower in a post-white-nose-syndrome world.

Indiana bats do not overwinter in southern Lower Michigan. Instead, they migrate up to 356 miles (575 km) to suitable hibernation sites that mostly are located in Kentucky and southern Indiana (Kurta, 1980; Kurta and Murray, 2002; Rockey et al., 2013; Winhold and Kurta, 2006). The earliest seasonal observation of an Indiana bat in southern part of the Lower Peninsula occurred on 28 April, and the latest autumn record is 11 October (Kurta and Rice, 2002).

Proposed Action

Motorola Solutions, Inc., intends to construct a 475-feet-tall telecommunications tower, south of the unincorporated community of Bailey, in Casnovia Township, Muskegon County, Michigan (Figs. 1-3). The tower will be enclosed within a fenced compound that will be 80-feet wide by 80-feet long and bordered by a treeless buffer 30 feet in width (Figs. 4–5), thus impacting about 0.5 acre of woodland. The project will utilize existing, primitive road corridors; hence, access to the site will not result in additional removal of woodland.

Previous Records of Indiana Bats near the Proposed Action

There are no records of the Indiana bat in Muskegon County. The closest summer records are two individuals captured in northeastern Barry County, about 45–50 miles southwest of the proposed tower, whereas the closest winter records are animals hibernating at Tippy Dam, near Wellston, about 65 miles north, in Manistee County (Kurta, 1980, 2008; Winhold, 2007). Despite the lack of records it is possible that Indiana bats occupy areas of suitable habitat in Muskegon County, because the climate

is appropriate and the distance from known hibernacula is within the migratory abilities of the species (Winhold and Kurta, 2006).

Purpose of Study

Trees will be removed from the area of the fenced compound and the surrounding buffer. Consequently, I was asked by Mr. Jonathon Sheetz, of Trileaf Corporation, to evaluate the habitat as to its suitability for Indiana bats and comment on how removal of the trees might impact this endangered species. The northern long-eared bat, a threatened species, was not considered during this evaluation, because tree-cutting is exempt under the 4(d) rule, unless the trees are near a known hibernaculum or a maternity site (USFWS, 2015); there are, however, no hibernacula of this species in Muskegon County or adjacent counties (Kurta, 2008), and the closest maternity site is east of Vermontville, Eaton County, about 60 miles southwest of the proposed tower (Foster and Kurta, 1999).

Methods

I examined aerial photographs of the area and visited the site on 11 March 2019. I made a qualitative investigation of the overall habitat on the property, based on the literature and my 42 years of experience with this bat in Michigan. Factors that I considered in the overall evaluation included:

1) availability of open water (ponds, streams, etc.) at the site or nearby;
2) extent and openness of the forest;
3) availability of flight space to provide access to roosts and foraging habitat;
4) abundance of trees of species often used as maternity roosts;
5) approximate size (diameter) of trees;
6) abundance of trees suitable for roosting right now (i.e., dead with peeling bark, moderate-to-high sunlight, absence of vines and other obstructions, sufficient diameter, and/or early-to-mid stage of decay);

7) proximity and extent of additional foraging and roosting areas; and

8) degree of human-caused disturbance.

I also ranked each potential roost tree as low, medium, or high in its ability to provide shelter for a maternity colony of Indiana bats, based on factors listed in #6 above. Note that these estimates of quality for individual trees apply only to the time of the field survey, because the suitability of a tree for roosting changes over time and can either increase or decrease (Barclay and Kurta, 2007). The diameter of each potential roost at breast height was estimated visually to the nearest 2 inches (5 cm). Only trees greater than or equal to 4 inches (10 cm) in diameter were assessed, because smaller trees are rarely used by individual bats and never as a primary roost for a colony (USFWS, 2007).

The proposed locations of the tower and the corners of the fenced area were marked by stakes, allowing me to determine easily whether a particular tree was within or close to the construction area. I recorded the approximate location of a potential roost with a hand-held global-positioning unit (Garmin 76CSx). Any potential roost tree was marked with orange flagging tape, on which the letters MS (for *Myotis sodalis*, the scientific name of the Indiana bat) were written, followed by a unique number.

Results and Discussion

The project area is within Moore Park, a 36-acre preserve, owned by Muskegon County (http://www.muskegoncountyparks.org/moore-park; Fig. 3). The park is in rolling land, about 20 miles east of the City of Muskegon and 20 miles north of the City of Grand Rapids, in a mostly rural part of Michigan. The landscape is dominated by agricultural lands, especially orchards, although numerous large and small patches of native forest are present and often interconnected by wooded corridors, which would favor the presence of Indiana bats. Major streams are absent, but many small ponds and small lakes dot the area and would provide easily accessible sources of drinking water for these flying mammals. The major highway in the area is only a 2-lane road, route M-37, which is located at least 0.25 mile from the proposed construction site; road

noise that might affect residency by bats (California Department of Transportation, 2016; Fensome and Matthews, 2016) was not evident during my visit. Similarly, a little-used railroad track existed 0.3 mile west of the planned tower, but an occasional train likely would not affect bats in the interior of the park, especially in summer, when leaves would greatly reduce the transmission of noise.

The tower site (Figs. 3–5) is on a high point of ground that is totally wooded (Fig. 6) except the current "road" corridors (Figs. 5 and 7), which appear mostly used as hiking paths and are not open to vehicular traffic by the public. The woodland is a mature beech-maple forest, with widely spaced trunks that typically are 15–35 inches in diameter. Bats could easily forage above and below the canopy, along the roads, and over adjacent wetlands, and drinking water is readily available at Half Moon Lake and at a pond north of White Road, suggesting that this area of Muskegon County is high-quality habitat. However, the proposed compound itself provides almost no roosting opportunities, because of its small size and because most trees are healthy.

The one exception was a maple, about 30 inches in diameter, that grew in the buffer area, about 10 feet outside the northeast corner of the proposed fence (43.262836N -85.807534W; Fig. 8). Although living, the tree had a number of large, dead branches with peeling bark that might provide an alternate roost for one or a few Indiana bats. Nevertheless, the tree would never function as a primary roost in its current state, because of the difficulty in accessing these areas of exfoliating bark once leaf-out has occurred and because these portions of the tree would be totally shaded in summer.

Conclusions and Recommendation

The general area of Moore Park and its surroundings is high-quality habitat for Indiana bats, with extensive, interconnected, mature woodlands, abundant open water, and little human disturbance. However, the specific patch of woods where the tower will be constructed is quite small and contains only one potential roost tree of very low quality. Removal of this one low-quality tree would not have an adverse effect on the

species, unless an Indiana bat actually was present when the tree was felled. Consequently, I recommend that this particular tree be removed during winter (1 November–31 March), when the bats are hibernating out of state or at Tippy Dam.

References

Barclay, R.M.R., and A. Kurta. 2007. Ecology and behavior of bats roosting in tree cavities and under bark. Pp. 17–59 *in* Bats in forests: conservation and management (M.J. Lacki, J.P. Hayes, and A. Kurta, eds.). Johns Hopkins University Press, Baltimore, Maryland.

Blehert, D.S., et al. 2009. Bat white-nose syndrome: an emerging fungal pathogen? Science, 323:227.

California Department of Transportation. 2016. Technical Guidance for the Assessment and Mitigation of the Effects of Traffic Noise and Road Construction Noise on Bats. July. Sacramento, CA. Prepared by ICF International, Sacramento, CA, and West Ecosystems Analysis, Inc., Davis, CA.

Callahan, E. V., R. D. Drobney, and R. L. Clawson. 1997. Selection of summer roosting sites by Indiana bats (*Myotis sodalis*) in Missouri. Journal of Mammalogy, 78:818–825.

Carter, T.C. 2003. Summer habitat use of roost trees by the endangered Indiana bat (*Myotis sodalis*) in the Shawnee National Forest of southern Illinois. Ph.D. dissertation, Southern Illinois University, Carbondale, Illinois.

Carter, T., G. Feldhamer, and J. Kath. 2001. Notes on summer roosting of Indiana bats. Bat Research News, 42:197–198.

Clawson, R. L. 2002. Trends in population size and current status. Pages 2–8 *in* The Indiana bat: biology and management of an endangered species (A. Kurta and J. Kennedy, eds.). Bat Conservation International, Austin, Texas.

Environmental Consulting and Technology. 2013. Management of Millers Creek. Sediment Accumulation Study. Available at: https://www.a2gov.org/.../MillersCreekSediment_FinalDraft_12%2031%2013.pdf.

Farmer, A., B. Cade, and D. Stauffer. 1997. Evaluation of a habitat suitability index model. Pages 172–179 *in* The Indiana bat: biology and management of an endangered species (A. Kurta and J. Kennedy, eds.). Bat Conservation International, Austin, Texas.

Fensome, A. G., and F. Matthews. 2016. Bats and roads; a meta-analysis and review of the evidence on vehicle collisions and barrier effects. Mammal Review, 46:311–323.

Foster, R., and A. Kurta. 1999. Roosting ecology of the northern bat (*Myotis septentrionalis)* and comparisons with the endangered Indiana bat (*Myotis sodalis*). Journal of Mammalogy, 80:659–672.

Frick, W. F., et al. 2010. An emerging disease causes regional population collapse of a common North American bat species. Science, 329:679–682.

Gardner, J. E., and E. A. Cook. 2002. Seasonal and geographic distribution and quantification of potential summer habitat. Pages 9–20 *in* The Indiana bat: biology and management of an endangered species (A. Kurta and J. Kennedy, eds.). Bat Conservation International, Austin, Texas.

Gardner, J. E., J. D. Garner, and J. E. Hofmann. 1991. Summer roost selection and roosting behavior of *Myotis sodalis* (Indiana bat) in Illinois. Unpublished report, Illinois Natural History Survey, Champaign, Illinois.

Humphrey, S. R. 1978. Status, winter habitat, and management of the endangered Indiana bat, *Myotis sodalis*. Florida Scientist, 41:66–76.

Humphrey, S. R., A. R. Richter, and J. B. Cope. 1977. Summer habitat and ecology of the endangered Indiana bat, *Myotis sodalis*. Journal of Mammalogy, 58:334–346.

Kiser, J. D., J. R. MacGregor, H. D. Bryan, and A. Howard. 2002. Use of concrete bridges as nightroosts. Pp. 208-215 in The Indiana bat: biology and management of an endangered species (A. Kurta and J. Kennedy, eds.). Bat Conservation International, Austin, Texas.

Kurta, A. 1980. Status of the Indiana bat, *Myotis sodalis*, in Michigan. Michigan Academician, 13:31–36.

Kurta, A. 2005. Ecology and behavior of Indiana bats in summer. Pages 29–42 *in* The Indiana bat and coal mining: a technical interactive forum (K. C. Vories, ed.). U.S. Geological Survey, Office of Surface Mining, Alton, Illinois.

Kurta, A. 2008. Bats of Michigan. Indiana State University Center for North American Bat Research and Conservation, Terre Haute, Indiana, 72 pp.

Kurta, A., and H. Rice. 2002. Ecology and management of the Indiana bat in Michigan. Michigan Academician, 33:361–376.

Kurta, A., and S.W. Murray. 2002. Philopatry and migration of banded Indiana bats and effects of using radio transmitters. Journal of Mammalogy, 83:585–589.

Kurta, A., and J. O. Whitaker, Jr. 1998. Diet of the endangered Indiana bat (*Myotis sodalis*) on the northern edge of its range. American Midland Naturalist, 140:280–286.

Kurta, A., S. W. Murray, and D. Miller. 2002. Roost selection and movements across the summer landscape. Pages 118–129 *in* The Indiana bat: biology and management of an endangered species (A. Kurta and J. Kennedy, eds.). Bat Conservation International, Austin, Texas.

Kurta, A., K. J. Williams, and R. Mies. 1996. Ecological, behavioural, and thermal observations of a peripheral population of Indiana bats. Pages 102–117 *in* Bats and Forests (R. M. R. Barclay and R. M. Brigham, eds.). Research Branch, Ministry of Forests, Province of British Columbia, Victoria, B. C., 292 pp.

Kurta, A., D. King, J. A. Teramino. J. M. Stribley, and K. J. Williams. 1993a. Summer roosts of the endangered Indiana bat (*Myotis sodalis*) on the northern edge of its range. American Midland Naturalist, 129:132–138.

Kurta, A., J. Kath, E. L. Smith, R. Foster, M. W. Orick, and R. Ross. 1993b. A maternity roost of the endangered Indiana bat (*Myotis sodalis*) in a hollow, unshaded sycamore (*Platanus occidentalis*). American Midland Naturalist, 130:405–407.

Mellos, J., Denys, L., C. D. Rockey, C. Johnson, and A. Kurta. 2014. Long-term use of a home area by Indiana bats during summer. Michigan Birds and Natural History, 21:222–226.

Murray, S. W. 1999. Nocturnal activity of the endangered Indiana bat (*Myotis sodalis*). M.S. thesis. Eastern Michigan University, Ypsilanti.

Murray, S. W., and A. Kurta. 2002. Variation in diet. Pages 182–192 *in* The Indiana bat: biology and management of an endangered species (A. Kurta and J. Kennedy, eds.). Bat Conservation International, Austin, Texas.

Murray, S. W., and A. Kurta. 2004. Nocturnal activity of the endangered Indiana bat (*Myotis sodalis*). Journal of Zoology (London), 262:197–206.

Richter, A. R., Humphrey, S. R., Cope, J. B., and Brack, V., Jr. 1993. Modified cave entrances**:** thermal effect on body mass and resulting decline of endangered Indiana bats (*Myotis sodalis*). Conservation Biology 7: 407–415.

Rockey, C. D., J. Stumpf, and A. Kurta. 2013. Additional winter records of Indiana bats (*Myotis sodalis*) banded during summer in Michigan. Northeastern Naturalist 20:N8–N13.

Romme, R. C., K. Tyrell, and V. Brack, Jr. 1995. Literature summary and habitat suitability index model: components of summer habitat for the Indiana bat, *Myotis sodalis*. Unpublished report. Nongame Program, Indiana Department of Natural Resources, Bloomington, 43 pp.

Silvis, A., R. W. Perry, and W. M. Ford. 2016. Relationships of three species of bats impacted by white-nose syndrome to forest condition and management. U.S. Forest Service, Southern Research Station, General Technical Report, SRS-214:1–48.

Sparks, D. W., J. O. Whitaker, Jr., and C. M. Ritzi. 2005. Foraging ecology of the endangered Indiana bat. *In* The Proceedings of the Indiana bat and coal mining: a technical interactive forum (K.C. Vories and A. Harrington, eds.). Office of Surface Mining, U.S. Department of the Interior, Alton, Illinois.

Sparks, D. W., C. M. Ritzi, J. E. Duchamp, and J. O. Whitaker, Jr. 2005. Foraging habitat of the Indiana bat (*Myotis sodalis*) at an urban-rural interface. Journal of Mammalogy, 86:713–718.

Taylor, D. A. R., and M. D. Tuttle. 2007. Water for wildlife: a handbook for ranchers and range managers. Bat Conservation International, Austin Texas, 18 pp.

Thogmartin, W. E., C. A. Sanders-Reed, J. A. Szymanski, P. C. McKann, L. Pruitt, R. A. King, M. C. Runge, and R. E. Russell. 2013. White-nose syndrome is likely to extirpate the endangered Indiana bat over large parts of it range. Biological Conservation, 160:162–172.

Turner, G. G., D. M. Reeder, and J. T. H. Coleman. 2011. A five-year assessment of mortality and geographic spread of white-nose syndrome in North American bats and a look to the future. Bat Research News, 52:13–27.

U.S. Fish and Wildlife Service. 2007. Indiana bat draft recovery plan: first revision. Ft. Snelling, Minnesota.

U.S. Fish and Wildlife Service. 2015. Endangered and threatened wildlife and plants; Threatened species status for the northern long-eared bat with 4(d) rule. Federal Register, 80:17974–18033.

U.S. Fish and Wildlife Service. 2017. 2017 Rangewide Indiana bat summer survey guidelines. May 9, 2017. Avaliable at: http://www.fws.gov/midwest/endangered/mammals/inba/inbasummersurveyguidance.html.

Winhold, L. 2007. Community ecology of bats in southern Lower Michigan, with emphasis on roost selection by *Myotis*. Unpubl. M.S. thesis, Eastern Michigan University, Ypsilanti, Michigan.

Winhold, L., and A. Kurta. 2006. Aspects of migration by the endangered Indiana bat, *Myotis sodalis*. Bat Research News, 47:1–6.

Winhold, L., E. Hough, and A. Kurta. 2005. Long-term fidelity of tree-roosting bats to a home area. Bat Research News, 46:9–10.

Figures

Figure 1. Map of Michigan, showing approximate location of the proposed project (star), in Muskegon County.

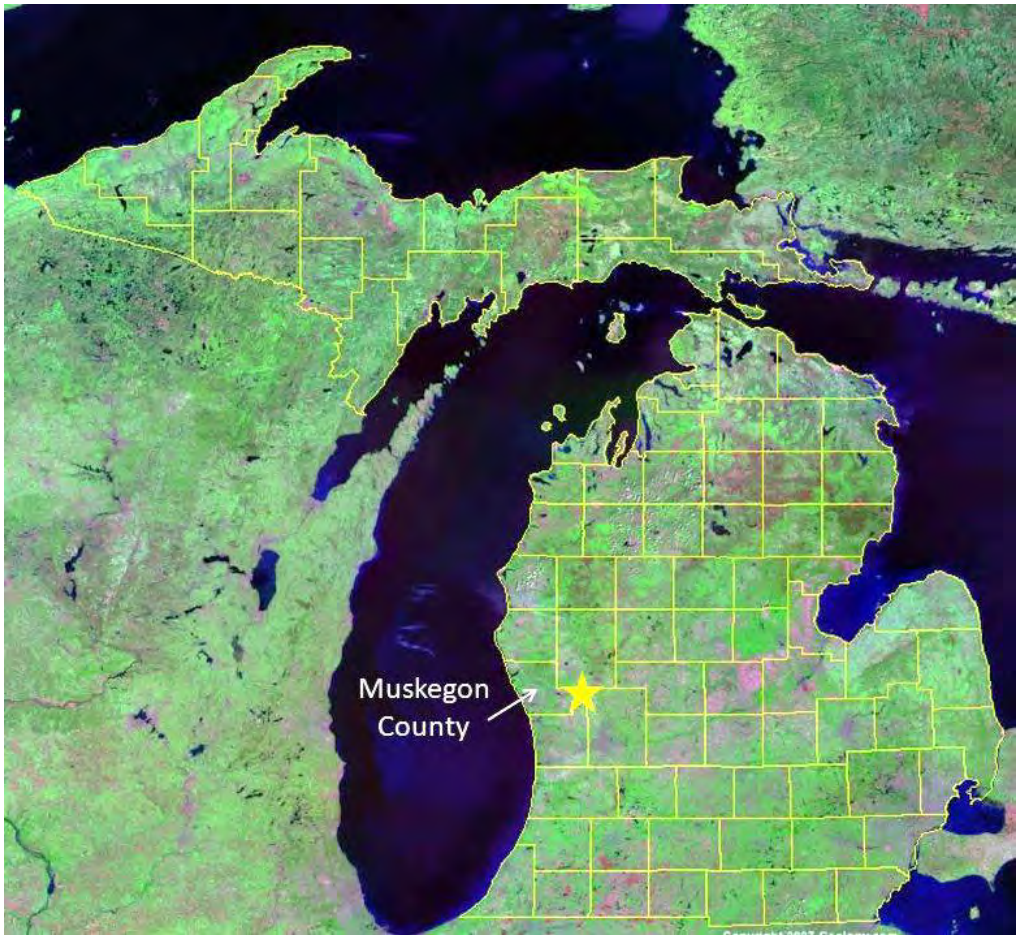

Figure 2. Location of the proposed tower (star), in a rural area, near Bailey, Muskegon County, Michigan. Imagery from Google Earth.

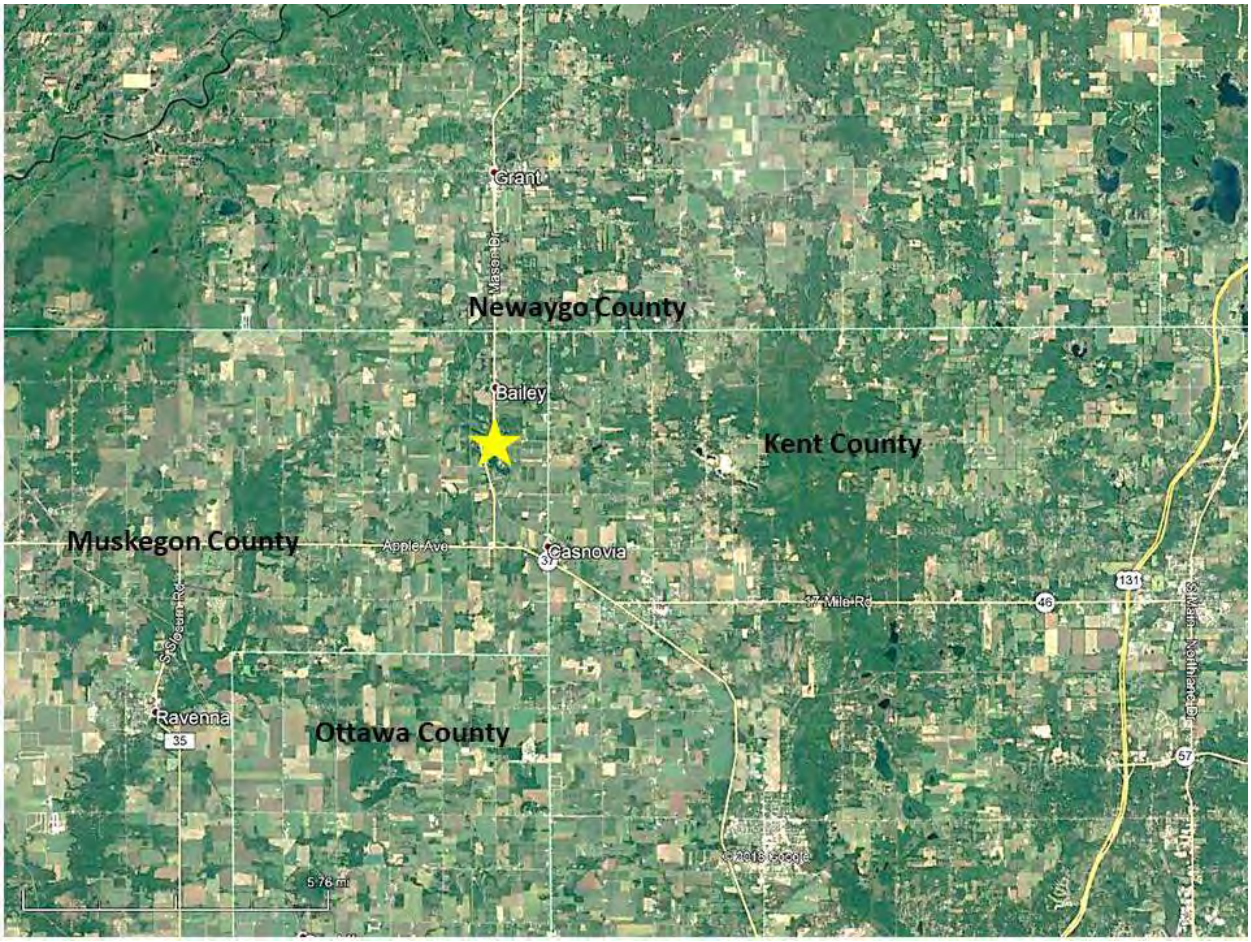

Figure 3. Local neighborhood surrounding the project area (yellow polygon), showing the rural nature of the adjacent landscape. Width of area within photo is about 1 mile. Imagery from Google Earth.

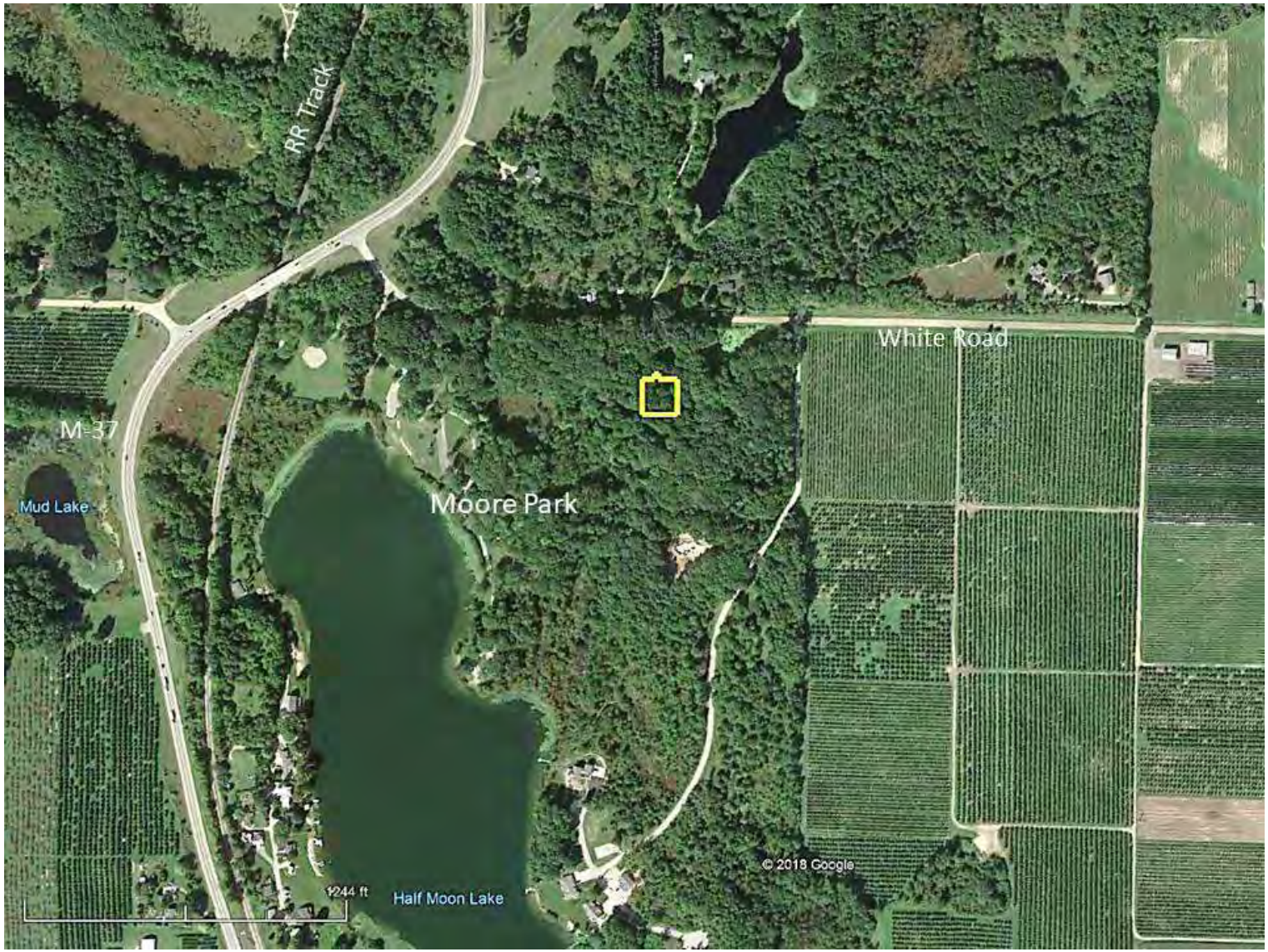

Figure 4. Closer view of the project area, showing the limits of the fenced compound (red) and tree-removal buffer (yellow). The existing, primitive access roads beneath the forest canopy are not visible (see Fig. 5). The white “X” indicates the approximate location of the lone potential roost tree.

Figure 5. Site plan. Removal of trees will occur within an area that, in total is about is 140-feet wide and 140-feet long (dashed square), including the fenced compound (solid square) and outside buffer, as well as a small area on the northern edge for a turn-around. Figures 4 and 5 are at approximately the same scale.

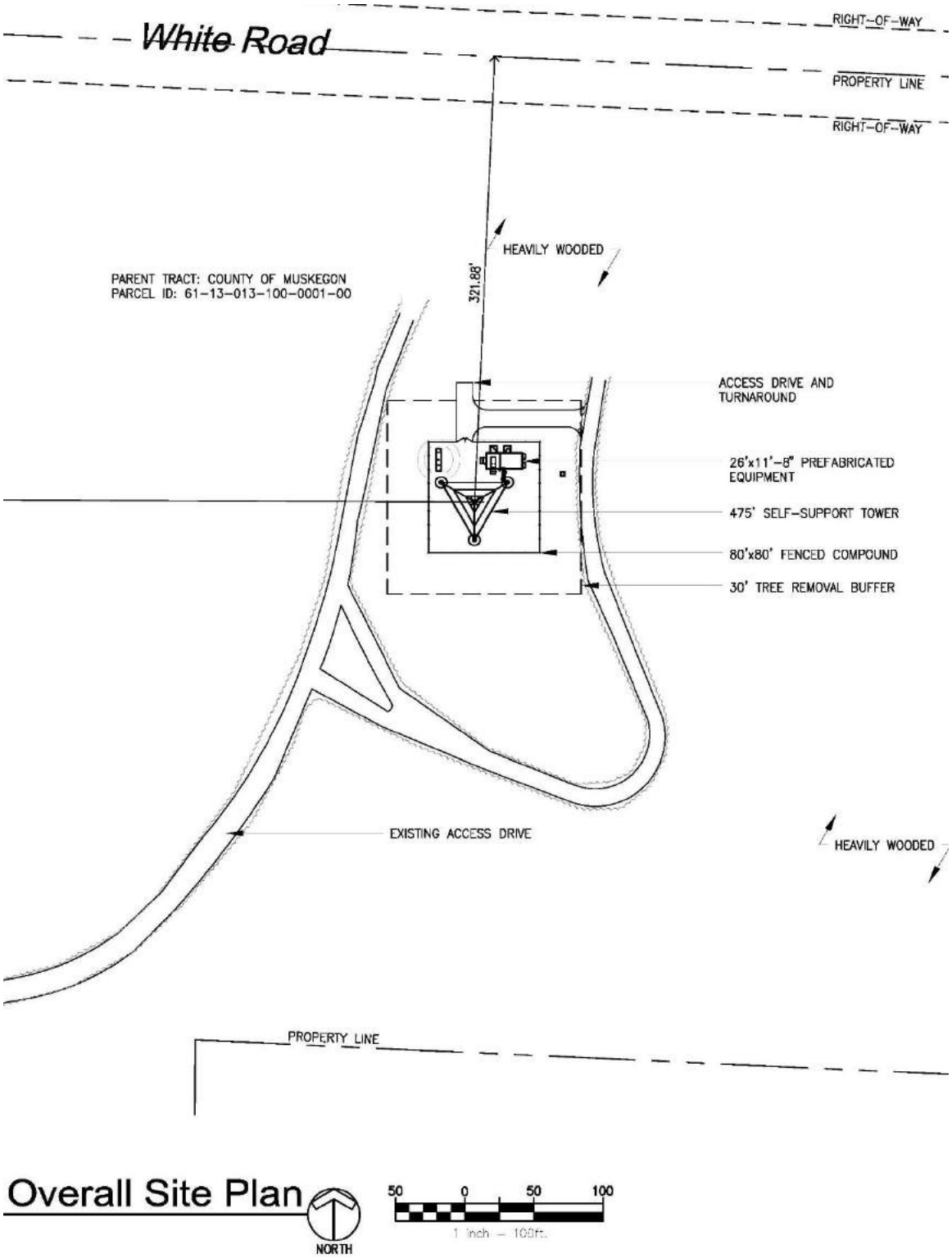

Figure 6. Photos taken from the proposed location of the staked center of the tower toward the south (top) and west (bottom), showing the mature beech-maple forest. See cover photo for a view to the east.

Figure 7. One of the existing “road” corridors that surround the proposed construction site and that will be used for building and maintaining the tower.

Figure 8. A living maple, with small amounts of exfoliating bark on the upper trunk and upper branches. These areas would be totally shaded and difficult to access by a flying bat once spring leaf-out occurs. This tree is the only potential roost that will be removed during construction.

United States Department of the Interior

FISH AND WILDLIFE SERVICE

2651 Coolidge Road, Suite 101
East Lansing, Michigan 48823-6360

IN REPLY REFER TO:

March 28, 2019

Ms. Lauren Sereno
1821 Walden Office Square, Suite 510
Schaumburg, Illinois 60173

Re: **Pyramid Network Services – Moore Park – Trileaf Project #646371**
White Road, Bailey, Michigan 49303
Muskegon County, Grant Quadrangle (USGS)
Latitude: 43° 15' 45.6" N, Longitude: 85° 48' 27.7" W

Dear Ms. Sereno:

Thank you for your revised letter of March 21, 2019, requesting consultation under section 7 of the Endangered Species Act of 1973, as amended (Act). Under this Federal Communications Commission (FCC) regulated project, Trileaf Corporation (Trileaf) is serving as a non-federal representative for purposes of the Act.

The proposed project (Project) involves the construction of a 475-foot-tall (488-feet-overall) self-support telecommunications tower and associated equipment within a proposed 80-foot by 80-foot (6,400-square-foot) lease area. An approximately 12-foot-wide access easement is proposed to extend north from the north side of the proposed telecommunications compound into a proposed service vehicle turnaround, and then east approximately 83.4 feet to an existing access drive. The Project area is located in Bailey, Casnovia Township, Muskegon County, Michigan (43.26266667, -85.80769444).

This site is currently forested land. Due to the presence of trees within the action area, potential habitat may be present for the endangered Indiana bat (*Myotis sodalis*) and/or threatened northern long-eared bat (*Myotis septentrionalis*; NLEB). A habitat assessment was performed by Dr. Allen Kurta on March 11, 2019 at the site to evaluate if potential roost trees (PRTs) for Indiana bats are present. The habitat assessment concluded that one low-quality PRT is present at the site. Based on this finding and discussions with this office, an emergence survey will be performed on the PRT in coordination with this office to demonstrate the absence or presence of roosting bats before construction begins. Based on the above, you have determined that the

Project *may affect, but is not likely to adversely affect* listed bats, and you are requesting U.S. Fish and Wildlife Service (Service) concurrence with your determination.

Indiana Bat

In Michigan, summering Indiana bats roost in trees in riparian, bottomland, and upland forests from approximately April through October. Indiana bats may summer in a wide range of habitats, from highly altered landscapes to intact forests. Roost trees vary considerably in size, but those used by Indiana bat maternity colonies are typically greater than 9 inches diameter at breast height (dbh). Male Indiana bats have been observed roosting in trees as small as 3 inches dbh. During the winter, Indiana bats hibernate predominantly in caves and abandoned mine portals.

NLEB

During the summer, NLEBs typically roost singly or in colonies underneath bark or in cavities, crevices, or hollows of both live and dead trees and/or snags (typically ≥3 inches dbh). On occasion, NLEBs will roost in structures, such as barns and sheds, when suitable tree roosts are unavailable. These bats forage for insects in upland and lowland woodlots and tree-lined corridors. During the winter, NLEBs hibernate predominantly in caves and abandoned mine portals.

On April 2, 2015, a final rule was published in the *Federal Register* listing the NLEB as threatened, along with an interim species-specific rule under section 4(d) of the Act, which lessens ESA restrictions that do not provide conservation benefit for the bat. On January 14, 2016, a final species-specific 4(d) rule was published in the *Federal Register*, further reducing restrictions that do not provide conservation benefit to the species. Federal agency actions that involve incidental take not prohibited under the final 4(d) rule may result in effects to individual NLEBs. Per section 7 of the Act, if a federal agency's action may affect a listed species, consultation with the U.S. Fish and Wildlife Service (Service) is required. This requirement does not change when a 4(d) rule is implemented. For this 4(d) rule, however, the Service has established a framework to streamline formal section 7 consultations when federal actions may affect NLEB but will not result in prohibited take. Federal agencies have the option to rely upon the finding of the programmatic biological opinion for the final 4(d) rule and to fulfill their project-specific section 7 responsibilities by using the established framework. For projects that *may affect, but are not likely to adversely affect* the species, agencies may follow typical consultation procedures.

Conclusion

We concur that the Project is *not likely to adversely affect* Indiana bats or NLEB for the following reasons:

- No more than 10% of the available habitat will be cleared within a half-mile of the Project area, making indirect take/adverse effects unlikely.
- An on-ground habitat assessment conducted on March 11, 2019 revealed the presence of a single, low-quality PRT for Indiana bats. Removal of the single PRT will occur only if an emergence survey, conducted in coordination with the Service at a date to be determined, is negative for bats. Removal of the single PRT after a negative emergence survey will preclude the possibility of direct take/adverse effects.
- Although the habitat assessment did not address NLEB, the lack of Indiana bat PRTs and overall habitat quality, as described in the report and demonstrated via site photos, support the same determination for NLEB.

Based on the above, any potential effects to Indiana bats and NLEB would be insignificant and/or discountable.

Migratory Birds

We have concerns regarding potential negative effects of communications towers on migratory birds, which are protected under the Migratory Bird Treaty Act (MBTA) (16 U.S.C. 703-712). Towers and guy wires may present collision hazards in the paths of birds during spring and fall migration periods. The extent of the hazard is greatest at night and during periods of low cloud ceiling and/or fog. Other factors affecting the degree of hazard include location of the tower in relation to bird migration flyways, presence of guy wires, tower height, and lighting.

The Service has recently revised its Recommended Best Practices for Communication Tower Design, Siting, Construction, Operation, Maintenance, and Decommissioning (see Enclosure).

These recommendations have been modified and updated from previous versions to incorporate the state of the science and the 2015 Federal Aviation Administration (FAA) Obstruction Marking and Lighting Advisory Circular AC 70/7460-1L. As part of our review of your current Project, we are requesting that your client offset the risk of this Project, as well as future tower construction, by changing the lighting on all of their existing towers, as allowable, to the new lighting patterns as recommended by the recently released FAA circular (AC 70/7460-1L) and the Service's new Best Management Practices. This includes extinguishing L-810 non-flashing red lights on towers greater than 350 feet AGL or reconfiguring L-810 non-flashing red lights to flash at 30 FPM in synchrony with other flashing obstruction lights on towers 150–350 feet AGL. These lighting changes will significantly reduce the risk of migratory bird collisions with your client's existing communication towers.

In addition, given the height of this proposed tower, we request that the Project implement motion- or heat-sensitive, down-shielded, and minimum intensity security lighting on all on-ground facilities, equipment, and infrastructure to reduce nighttime bird attraction.

Our office is currently promoting a state-wide effort to reduce bird collisions with communication towers through changes in lighting. Industry cooperation by implementing all available lighting changes on existing communications towers will further support conservation of an important component of our Nation's fish and wildlife resources. These changes have the added benefit of reducing industry cost associated with tower lighting.

Please note that when a project requires consultation under section 7 of the Act, the Service must consult directly with the federal action agency unless that agency formally designates a non-federal representative (50 CFR 402.08). Non-federal representatives may prepare analyses or conduct informal consultations; however, the ultimate responsibility for section 7 compliance under the Act remains with the federal agency. If the FCC concurs with your determination, the Project as proposed has completed informal section 7 consultation.

If Project plans change further or new information about the Project becomes available that indicates listed species, proposed species or critical habitat may be affected in a manner or to an extent not previously considered, you should reinitiate consultation with this office.

We appreciate the opportunity to cooperate with you in conserving federally protected species. If you have any questions regarding these comments, please contact Jenny Wong, of this office, at (517) 351-7261 or Jennifer_Wong@fws.gov.

Sincerely,

Acting For, Scott Hicks
Field Supervisor

cc: Dan Kennedy, MDNR, Wildlife Division, Lansing
Joelle Gehring, FCC, Washington, DC

Enclosure (1)

Appendix E

Section 106 Review

TRILEAF™
ENVIRONMENTAL • ARCHITECTURE • ENGINEERING
1821 Walden Office Square, Suite 510, Schaumburg, Illinois 60173 - 630.227.0202 - www.trileaf.com

December 20, 2018

State Historic Preservation Office
Michigan State Housing Development Authority
735 E. Michigan Ave.
P.O. Box 30044
Lansing, MI 48909

RE: **Pyramid Network Services – Moore Park – Trileaf Project #646371**
White Road, Bailey, Michigan 49303
Muskegon County, Grant Quadrangle (USGS)
Latitude: 43° 15' 45.6" N, Longitude: 85° 48' 27.7" W

To Whom It May Concern,

Trileaf Corporation is in the process of completing a NEPA review at the referenced property. Our client proposes to construct a 475-foot-tall (488-feet-overall) self-support telecommunications tower and associated equipment within a proposed 80-foot by 80-foot (6,400-square-foot) lease area. An approximately 12-foot-wide access easement is proposed to extend north from the north side of the proposed telecommunications compound into a proposed service vehicle turn-around, and then east approximately 83.4 feet to an existing access drive. The antenna will be licensed by the Federal Communications Commission (FCC).

In accordance with the *Nationwide Programmatic Agreement for Review of Effects on Historic Properties for Certain Undertakings Approved by the Federal Communications Commission*, dated September 2004, a cultural resource investigation has been conducted. Our investigation includes determining if the site is contained in, on, or within the viewshed of a building, site, district, structure or object, significant in American history, architecture, archeology, engineering or culture, that is listed, or eligible for listing on the State or National Registers of Historic Places, or located in or on an Indian Religious Site.

Summary reports of this investigation, maps, photographs and other information are provided in the attached Form 620. As noted in Attachment 5, there are **No Historic Properties in the APE for Direct Effects and No Historic Properties in the APE for Visual Effects**. Therefore, it is recommended that the proposed undertaking proceed without further archaeological review.

We appreciate your cooperation in this regard and anticipate your concurrence with these findings. Please call me at (630) 227-0202 or email **l.sereno@trileaf.com** if you need any additional information or have any questions. Thank you for your assistance.

Sincerely,

Lauren Sereno

Lauren Sereno
Project Scientist

FCC Form 620

Notification Date: **7AM EST 12/21/2018**
File Number: **0008476458**

FCC Wireless Telecommunications Bureau
New Tower ("NT") Submission Packet

Approved by OMB
3060 – 1039
See instructions for
public burden estimates

General Information

1) (Select only one) **(NE)** **NE** – New **UA** – Update of Application **WD** – Withdrawal of Application	
2) If this application is for an Update or Withdrawal, enter the file number of the pending application currently on file.	File Number:

Applicant Information

3) FCC Registration Number (FRN): **0005428818**
4) Name: **Pyramid Network Services**

Contact Name

5) First Name: **Don**	6) MI:	7) Last Name: **Cottrell**	8) Suffix:
9) Title:			

Contact Information

10) P.O. Box:	**And /Or**	11) Street Address: **6615 Towpath Road**		
12) City: **East Syracuse**			13) State: **NY**	14) Zip Code: **13057**
15) Telephone Number: **(314)997-6111**		16) Fax Number:		
17) E-mail Address: **dcottrell@pyramidnetworkservices.com**				

Consultant Information

18) FCC Registration Number (FRN): **0011724176**
19) Name: **Great Lakes Research, LLC, on behalf of Trileaf Corp**

Principal Investigator

20) First Name: **Mark**	21) MI:	22) Last Name: **Branstner**	23) Suffix:
24) Title:			

Principal Investigator Contact Information

25) P.O. Box:	**And /Or**	26) Street Address: **1116 Dodge Street**		
27) City: **Lake Geneva**			28) State: **WI**	29) Zip Code: **53147**
30) Telephone Number: **(630)227-0202**		31) Fax Number:		
32) E-mail Address: **l.sereno@trileaf.com**				

Professional Qualification

33) Does the Principal Investigator satisfy the Secretary of the Interior's Professional Qualification Standards?	(X) Yes ( ) No

34) Areas of Professional Qualification:

(X) Archaeologist

( ) Architectural Historian

( ) Historian

( ) Architect

( ) Other (Specify) _____

Additional Staff

35) Are there other staff involved who meet the Professional Qualification Standards of the Secretary of the Interior?	( ) Yes (X) No

If "YES," complete the following:

36) First Name:	37) MI:	38) Last Name:	39) Suffix:
40) Title:			

41) Areas of Professional Qualification:

( ) Archaeologist

( ) Architectural Historian

( ) Historian

( ) Architect

( ) Other (Specify) _____

Site Information

Tower Construction Notification System

1) TCNS Notification Number: **180995**

Site Information

2) Positive Train Control Filing Subject to Expedited Treatment Under Program Comment: ( ) Yes (X) No

3) Site Name: **Moore Park**

4) Site Address: **White Road**

5) Detailed Description of Project:

Legal Description: S13 T10N R13W

6) City: **Bailey**	7) State: **MI**	8) Zip Code: **49303**

9) County/Borough/Parish: **MUSKEGON**

10) Nearest Crossroads: **Norris Road and Westveer Lane**

11) **NAD 83** Latitude (DD-MM-SS.S): **43-15-45.6** (X) N or ( ) S

12) **NAD 83** Longitude (DD-MM-SS.S): **085-48-27.7** ( ) E or (X) W

Tower Information

13) Tower height above ground level (include top-mounted attachments such as lightning rods): **148.7** ( ) Feet (X) Meters

14) Tower Type (Select One):

( ) Guyed lattice tower

(X) Self-supporting lattice

( ) Monopole

( ) Other (Describe):

Project Status

15) Current Project Status (Select One):

(X) Construction has not yet commenced

( ) Construction has commenced, but is not completed — Construction commenced on: _____

( ) Construction has been completed — Construction commenced on: _____

Construction completed on: _____

Determination of Effect

14) Direct Effects (Select One):

(X) No Historic Properties in Area of Potential Effects (APE)

( ) No Effect on Historic Properties in APE

( ) No Adverse Effect on Historic Properties in APE

( ) Adverse Effect on one or more Historic Properties in APE

15) Visual Effects (Select One):

(X) No Historic Properties in Area of Potential Effects (APE)

( ) No Effect on Historic Properties in APE

( ) No Adverse Effect on Historic Properties in APE

( ) Adverse Effect on one or more Historic Properties in APE

Tribal/NHO Involvement

1) Have Indian Tribes or Native Hawaiian Organizations (NHOs) been identified that may attach religious and cultural significance to historic properties which may be affected by the undertaking within the APEs for direct and visual effects?	(X) Yes ( ) No

2a) Tribes/NHOs contacted through TCNS Notification Number: 180995 Number of Tribes/NHOs: 32

2b) Tribes/NHOs contacted through an alternate system: Number of Tribes/NHOs: 0

Tribe/NHO Contacted Through TCNS

3) Tribe/NHO FRN:

4) Tribe/NHO Name: **Bad River Band of Lake Superior Tribe of Chippewa Indians**

Contact Name

5) First Name: **Edith**	6) MI:	7) Last Name: **Leoso**	8) Suffix:
9) Title: **THPO**			

Dates & Response

10) Date Contacted 12/05/2018 11) Date Replied _____

(X) No Reply

( ) Replied/No Interest

( ) Replied/Have Interest

( ) Replied/Other

Tribe/NHO Contacted Through TCNS

3) Tribe/NHO FRN:

4) Tribe/NHO Name: **Chippewa Cree Tribe of the Rocky Boy's Reservation**

Contact Name

5) First Name: **Jonathan**	6) MI:	7) Last Name: **Windy Boy**	8) Suffix:
9) Title: **THPO**			

Dates & Response

10) Date Contacted 12/05/2018 11) Date Replied _____

(X) No Reply

( ) Replied/No Interest

( ) Replied/Have Interest

( ) Replied/Other

Tribal/NHO Involvement

1) Have Indian Tribes or Native Hawaiian Organizations (NHOs) been identified that may attach religious and cultural significance to historic properties which may be affected by the undertaking within the APEs for direct and visual effects?	(X) Yes ( ) No

2a) Tribes/NHOs contacted through TCNS Notification Number: 180995 Number of Tribes/NHOs: 32

2b) Tribes/NHOs contacted through an alternate system: Number of Tribes/NHOs: 0

Tribe/NHO Contacted Through TCNS

3) Tribe/NHO FRN:

4) Tribe/NHO Name: **Citizen Potawatomi Nation**

Contact Name

5) First Name: **Tracy**	6) MI:	7) Last Name: **Wind**	8) Suffix:
9) Title: **THPO**			

Dates & Response

10) Date Contacted 12/05/2018 11) Date Replied

(X) No Reply

( ) Replied/No Interest

( ) Replied/Have Interest

( ) Replied/Other

Tribe/NHO Contacted Through TCNS

3) Tribe/NHO FRN:

4) Tribe/NHO Name: **Crow Creek Sioux Tribe**

Contact Name

5) First Name: **Montana & Associates**	6) MI:	7) Last Name: **LLC**	8) Suffix:
9) Title: **Attorney**			

Dates & Response

10) Date Contacted 12/05/2018 11) Date Replied 12/07/2018

( ) No Reply

( ) Replied/No Interest

(X) Replied/Have Interest

( ) Replied/Other

Tribal/NHO Involvement

1) Have Indian Tribes or Native Hawaiian Organizations (NHOs) been identified that may attach religious and cultural significance to historic properties which may be affected by the undertaking within the APEs for direct and visual effects?	(X) Yes ( ) No

2a) Tribes/NHOs contacted through TCNS Notification Number: 180995 Number of Tribes/NHOs: 32

2b) Tribes/NHOs contacted through an alternate system: Number of Tribes/NHOs: 0

Tribe/NHO Contacted Through TCNS

3) Tribe/NHO FRN:

4) Tribe/NHO Name: **Eastern Shawnee Tribe of Oklahoma**

Contact Name

5) First Name: **Travis**	6) MI:	7) Last Name: **Patton**	8) Suffix:
9) Title: **Cell Tower Coordinator**			

Dates & Response

10) Date Contacted 12/06/2018 11) Date Replied 12/13/2018

( ) No Reply

( ) Replied/No Interest

( ) Replied/Have Interest

(X) Replied/Other

Tribe/NHO Contacted Through TCNS

3) Tribe/NHO FRN:

4) Tribe/NHO Name: **Fort Belknap Indian Community**

Contact Name

5) First Name: **Michael**	6) MI:	7) Last Name: **Blackwolf**	8) Suffix:
9) Title: **THPO**			

Dates & Response

10) Date Contacted 12/06/2018 11) Date Replied

(X) No Reply

( ) Replied/No Interest

( ) Replied/Have Interest

( ) Replied/Other

Tribal/NHO Involvement

1) Have Indian Tribes or Native Hawaiian Organizations (NHOs) been identified that may attach religious and cultural significance to historic properties which may be affected by the undertaking within the APEs for direct and visual effects?	(X) Yes ( ) No

2a) Tribes/NHOs contacted through TCNS Notification Number: 180995 Number of Tribes/NHOs: 32

2b) Tribes/NHOs contacted through an alternate system: Number of Tribes/NHOs: 0

Tribe/NHO Contacted Through TCNS

3) Tribe/NHO FRN:

4) Tribe/NHO Name: **Ho-Chunk Nation**

Contact Name

5) First Name: **William**	6) MI:	7) Last Name: **Quackenbush**	8) Suffix:
9) Title: **Tribal Historic Preservation Officer**			

Dates & Response

10) Date Contacted 12/05/2018 11) Date Replied _____

(X) No Reply

( ) Replied/No Interest

( ) Replied/Have Interest

( ) Replied/Other

Tribe/NHO Contacted Through TCNS

3) Tribe/NHO FRN:

4) Tribe/NHO Name: **Huron Potawatomi**

Contact Name

5) First Name: **John**	6) MI:	7) Last Name: **Rodwan**	8) Suffix:
9) Title: **Environmental Director**			

Dates & Response

10) Date Contacted 12/05/2018 11) Date Replied _____

(X) No Reply

( ) Replied/No Interest

( ) Replied/Have Interest

( ) Replied/Other

Tribal/NHO Involvement

1) Have Indian Tribes or Native Hawaiian Organizations (NHOs) been identified that may attach religious and cultural significance to historic properties which may be affected by the undertaking within the APEs for direct and visual effects?	(X) Yes ( ) No

2a) Tribes/NHOs contacted through TCNS Notification Number: 180995 Number of Tribes/NHOs: 32

2b) Tribes/NHOs contacted through an alternate system: Number of Tribes/NHOs: 0

Tribe/NHO Contacted Through TCNS

3) Tribe/NHO FRN:

4) Tribe/NHO Name: **Keweenaw Bay Indian Community**

Contact Name

5) First Name: **Gary**	6) MI:	7) Last Name: **Loonsfoot**	8) Suffix: **Jr**
9) Title: **THPO**			

Dates & Response

10) Date Contacted 12/06/2018 11) Date Replied _____

(X) No Reply

( ) Replied/No Interest

( ) Replied/Have Interest

( ) Replied/Other

Tribe/NHO Contacted Through TCNS

3) Tribe/NHO FRN:

4) Tribe/NHO Name: **Lac du Flambeau Band of Lake Superior Chippewa Indians**

Contact Name

5) First Name: **Melinda**	6) MI: **J**	7) Last Name: **Young**	8) Suffix:
9) Title: **THPO**			

Dates & Response

10) Date Contacted 12/06/2018 11) Date Replied _____

(X) No Reply

( ) Replied/No Interest

( ) Replied/Have Interest

( ) Replied/Other

Tribal/NHO Involvement

1) Have Indian Tribes or Native Hawaiian Organizations (NHOs) been identified that may attach religious and cultural significance to historic properties which may be affected by the undertaking within the APEs for direct and visual effects?	(X) Yes ( ) No

2a) Tribes/NHOs contacted through TCNS Notification Number: **180995** Number of Tribes/NHOs: **32**

2b) Tribes/NHOs contacted through an alternate system: Number of Tribes/NHOs: **0**

Tribe/NHO Contacted Through TCNS

3) Tribe/NHO FRN:

4) Tribe/NHO Name: **Lac Vieux Desert Band of Lake Superior Chippewa Indians**

Contact Name

5) First Name: **Daisy**	6) MI:	7) Last Name: **McGeshick**	8) Suffix: **Ms**
9) Title: **THPO and NAGPRA Representative**			

Dates & Response

10) Date Contacted **12/05/2018** 11) Date Replied **12/10/2018**

( ) No Reply

( ) Replied/No Interest

( ) Replied/Have Interest

(X) Replied/Other

Tribe/NHO Contacted Through TCNS

3) Tribe/NHO FRN:

4) Tribe/NHO Name: **Little River Band of Ottawa Indians**

Contact Name

5) First Name: **Jonnie**	6) MI: **J**	7) Last Name: **Sam**	8) Suffix: **II**
9) Title: **Historic Preservation Director**			

Dates & Response

10) Date Contacted **12/05/2018** 11) Date Replied **12/05/2018**

( ) No Reply

( ) Replied/No Interest

( ) Replied/Have Interest

(X) Replied/Other

Tribal/NHO Involvement

1) Have Indian Tribes or Native Hawaiian Organizations (NHOs) been identified that may attach religious and cultural significance to historic properties which may be affected by the undertaking within the APEs for direct and visual effects?	(X) Yes ( ) No

2a) Tribes/NHOs contacted through TCNS Notification Number: 180995 Number of Tribes/NHOs: 32

2b) Tribes/NHOs contacted through an alternate system: Number of Tribes/NHOs: 0

Tribe/NHO Contacted Through TCNS

3) Tribe/NHO FRN:

4) Tribe/NHO Name: **Menominee Indian Tribe of Wisconsin**

Contact Name

5) First Name: **David**	6) MI:	7) Last Name: **Grignon**	8) Suffix:
9) Title: **THPO**			

Dates & Response

10) Date Contacted 12/06/2018 11) Date Replied

(X) No Reply

( ) Replied/No Interest

( ) Replied/Have Interest

( ) Replied/Other

Tribe/NHO Contacted Through TCNS

3) Tribe/NHO FRN:

4) Tribe/NHO Name: **Miami Tribe of Oklahoma**

Contact Name

5) First Name: **Diane**	6) MI:	7) Last Name: **Hunter**	8) Suffix:
9) Title: **THPO**			

Dates & Response

10) Date Contacted 12/05/2018 11) Date Replied 12/05/2018

( ) No Reply

( ) Replied/No Interest

( ) Replied/Have Interest

(X) Replied/Other

Tribal/NHO Involvement

1) Have Indian Tribes or Native Hawaiian Organizations (NHOs) been identified that may attach religious and cultural significance to historic properties which may be affected by the undertaking within the APEs for direct and visual effects?	(X) Yes ( ) No

2a) Tribes/NHOs contacted through TCNS Notification Number: 180995 Number of Tribes/NHOs: 32

2b) Tribes/NHOs contacted through an alternate system: Number of Tribes/NHOs: 0

Tribe/NHO Contacted Through TCNS

3) Tribe/NHO FRN:

4) Tribe/NHO Name: **Northern Arapaho**

Contact Name

5) First Name: **Devin**	6) MI:	7) Last Name: **Oldman**	8) Suffix:
9) Title: **THPO**			

Dates & Response

10) Date Contacted 12/06/2018 11) Date Replied 12/12/2018

( ) No Reply

( ) Replied/No Interest

( ) Replied/Have Interest

(X) Replied/Other

Tribe/NHO Contacted Through TCNS

3) Tribe/NHO FRN:

4) Tribe/NHO Name: **Otoe-Missouria Tribe of Indians**

Contact Name

5) First Name: **Elsie**	6) MI:	7) Last Name: **Whitehorn**	8) Suffix:
9) Title: **Tribal Historic Preservation Officer**			

Dates & Response

10) Date Contacted 12/05/2018 11) Date Replied

(X) No Reply

( ) Replied/No Interest

( ) Replied/Have Interest

( ) Replied/Other

Tribal/NHO Involvement

1) Have Indian Tribes or Native Hawaiian Organizations (NHOs) been identified that may attach religious and cultural significance to historic properties which may be affected by the undertaking within the APEs for direct and visual effects?	(X) Yes ( ) No

2a) Tribes/NHOs contacted through TCNS Notification Number: 180995 Number of Tribes/NHOs: 32

2b) Tribes/NHOs contacted through an alternate system: Number of Tribes/NHOs: 0

Tribe/NHO Contacted Through TCNS

3) Tribe/NHO FRN:

4) Tribe/NHO Name: **Ottawa Tribe of Oklahoma**

Contact Name

5) First Name: **Cheryl**	6) MI:	7) Last Name: **Stafford**	8) Suffix:
9) Title: **EPA**			

Dates & Response

10) Date Contacted 12/06/2018 11) Date Replied _____

(X) No Reply

( ) Replied/No Interest

( ) Replied/Have Interest

( ) Replied/Other

Tribe/NHO Contacted Through TCNS

3) Tribe/NHO FRN:

4) Tribe/NHO Name: **Pokagon Band of Potawatomi Indians**

Contact Name

5) First Name: **Matthew**	6) MI:	7) Last Name: **Bussler**	8) Suffix:
9) Title: **Tribal Historic Preservation Officer**			

Dates & Response

10) Date Contacted 12/06/2018 11) Date Replied _____

(X) No Reply

( ) Replied/No Interest

( ) Replied/Have Interest

( ) Replied/Other

Tribal/NHO Involvement

1) Have Indian Tribes or Native Hawaiian Organizations (NHOs) been identified that may attach religious and cultural significance to historic properties which may be affected by the undertaking within the APEs for direct and visual effects?	(X) Yes ( ) No

2a) Tribes/NHOs contacted through TCNS Notification Number: 180995 Number of Tribes/NHOs: 32

2b) Tribes/NHOs contacted through an alternate system: Number of Tribes/NHOs: 0

Tribe/NHO Contacted Through TCNS

3) Tribe/NHO FRN:

4) Tribe/NHO Name: **Ponca Tribe of Indians of Oklahoma**

Contact Name

5) First Name: **Halona**	6) MI:	7) Last Name: **Cabe**	8) Suffix:
9) Title: **THPO**			

Dates & Response

10) Date Contacted 12/05/2018 11) Date Replied _____

(X) No Reply

( ) Replied/No Interest

( ) Replied/Have Interest

( ) Replied/Other

Tribe/NHO Contacted Through TCNS

3) Tribe/NHO FRN:

4) Tribe/NHO Name: **Prairie Band Potawatomi Nation**

Contact Name

5) First Name: **Thomas**	6) MI:	7) Last Name: **Wabnum**	8) Suffix:
9) Title: **Tribal Historical Cultural Preservation**			

Dates & Response

10) Date Contacted 12/06/2018 11) Date Replied _____

(X) No Reply

( ) Replied/No Interest

( ) Replied/Have Interest

( ) Replied/Other

Tribal/NHO Involvement

1) Have Indian Tribes or Native Hawaiian Organizations (NHOs) been identified that may attach religious and cultural significance to historic properties which may be affected by the undertaking within the APEs for direct and visual effects?	(X) Yes ( ) No

2a) Tribes/NHOs contacted through TCNS Notification Number: 180995 Number of Tribes/NHOs: 32

2b) Tribes/NHOs contacted through an alternate system: Number of Tribes/NHOs: 0

Tribe/NHO Contacted Through TCNS

3) Tribe/NHO FRN:

4) Tribe/NHO Name: **Prairie Island Indian Community**

Contact Name

5) First Name: **Noah**	6) MI: **C**	7) Last Name: **White**	8) Suffix: **III**
9) Title: **THPO**			

Dates & Response

10) Date Contacted 12/05/2018 11) Date Replied 12/12/2018

( ) No Reply

( ) Replied/No Interest

(X) Replied/Have Interest

( ) Replied/Other

Tribe/NHO Contacted Through TCNS

3) Tribe/NHO FRN:

4) Tribe/NHO Name: **Red Cliff Band of Lake Superior Chippewa Indians of Wisconsin**

Contact Name

5) First Name: **Marvin**	6) MI:	7) Last Name: **DeFoe**	8) Suffix:
9) Title: **THPO**			

Dates & Response

10) Date Contacted 12/05/2018 11) Date Replied

(X) No Reply

( ) Replied/No Interest

( ) Replied/Have Interest

( ) Replied/Other

Tribal/NHO Involvement

1) Have Indian Tribes or Native Hawaiian Organizations (NHOs) been identified that may attach religious and cultural significance to historic properties which may be affected by the undertaking within the APEs for direct and visual effects?	(X) Yes ( ) No

2a) Tribes/NHOs contacted through TCNS Notification Number: **180995** Number of Tribes/NHOs: **32**

2b) Tribes/NHOs contacted through an alternate system: Number of Tribes/NHOs: **0**

Tribe/NHO Contacted Through TCNS

3) Tribe/NHO FRN:

4) Tribe/NHO Name: **Red Lake Band of Chippewa Indians of Minnesota**

Contact Name

5) First Name: **Kade**	6) MI: **M**	7) Last Name: **Ferris**	8) Suffix: **MS**
9) Title: **Tribal Archaeologist/THPO**			

Dates & Response

10) Date Contacted **12/05/2018** 11) Date Replied **12/10/2018**

( ) No Reply

( ) Replied/No Interest

( ) Replied/Have Interest

(X) Replied/Other

Tribe/NHO Contacted Through TCNS

3) Tribe/NHO FRN:

4) Tribe/NHO Name: **Sac & Fox Tribe of the Mississippi in Iowa**

Contact Name

5) First Name: **Johnathan**	6) MI: **L**	7) Last Name: **Buffalo**	8) Suffix:
9) Title: **Historic Preservation Director**			

Dates & Response

10) Date Contacted **12/06/2018** 11) Date Replied **12/05/2018**

( ) No Reply

(X) Replied/No Interest

( ) Replied/Have Interest

( ) Replied/Other

Tribal/NHO Involvement

1) Have Indian Tribes or Native Hawaiian Organizations (NHOs) been identified that may attach religious and cultural significance to historic properties which may be affected by the undertaking within the APEs for direct and visual effects?	(X) Yes ( ) No

2a) Tribes/NHOs contacted through TCNS Notification Number: 180995 Number of Tribes/NHOs: 32

2b) Tribes/NHOs contacted through an alternate system: Number of Tribes/NHOs: 0

Tribe/NHO Contacted Through TCNS

3) Tribe/NHO FRN:

4) Tribe/NHO Name: **Shawnee Tribe**

Contact Name

5) First Name: **Kim**	6) MI:	7) Last Name: **Jumper**	8) Suffix:
9) Title: **THPO**			

Dates & Response

10) Date Contacted 12/06/2018 11) Date Replied _____

(X) No Reply

( ) Replied/No Interest

( ) Replied/Have Interest

( ) Replied/Other

Tribe/NHO Contacted Through TCNS

3) Tribe/NHO FRN:

4) Tribe/NHO Name: **Sisseton-Wahpeton Oyate of the Lake Traverse Reservation**

Contact Name

5) First Name: **Alicia**	6) MI:	7) Last Name: **Cloud**	8) Suffix:
9) Title: **TCNS Compliance Reviewer**			

Dates & Response

10) Date Contacted 12/05/2018 11) Date Replied 12/05/2018

( ) No Reply

( ) Replied/No Interest

(X) Replied/Have Interest

( ) Replied/Other

Tribal/NHO Involvement

1) Have Indian Tribes or Native Hawaiian Organizations (NHOs) been identified that may attach religious and cultural significance to historic properties which may be affected by the undertaking within the APEs for direct and visual effects?	(X) Yes ( ) No

2a) Tribes/NHOs contacted through TCNS Notification Number: 180995 Number of Tribes/NHOs: 32

2b) Tribes/NHOs contacted through an alternate system: Number of Tribes/NHOs: 0

Tribe/NHO Contacted Through TCNS

3) Tribe/NHO FRN:

4) Tribe/NHO Name: **Sokaogon Chippewa Community**

Contact Name

5) First Name: **Adam**	6) MI: **J**	7) Last Name: **VanZile**	8) Suffix:
9) Title: **Tribal Historic Preservation Officer**			

Dates & Response

10) Date Contacted 12/06/2018 11) Date Replied

(X) No Reply

( ) Replied/No Interest

( ) Replied/Have Interest

( ) Replied/Other

Tribe/NHO Contacted Through TCNS

3) Tribe/NHO FRN:

4) Tribe/NHO Name: **Spirit Lake Nation**

Contact Name

5) First Name: **Susie**	6) MI:	7) Last Name: **Fox**	8) Suffix:
9) Title: **FCC Compliance Officer**			

Dates & Response

10) Date Contacted 12/05/2018 11) Date Replied 12/05/2018

( ) No Reply

( ) Replied/No Interest

(X) Replied/Have Interest

( ) Replied/Other

Tribal/NHO Involvement

1) Have Indian Tribes or Native Hawaiian Organizations (NHOs) been identified that may attach religious and cultural significance to historic properties which may be affected by the undertaking within the APEs for direct and visual effects?	(X) Yes ( ) No

2a) Tribes/NHOs contacted through TCNS Notification Number: 180995 Number of Tribes/NHOs: 32

2b) Tribes/NHOs contacted through an alternate system: Number of Tribes/NHOs: 0

Tribe/NHO Contacted Through TCNS

3) Tribe/NHO FRN:

4) Tribe/NHO Name: **Turtle Mountain Band of Chippewa**

Contact Name

5) First Name: **Jeff**	6) MI:	7) Last Name: **Desjarlais**	8) Suffix: **Jr**
9) Title: **Acting THPO**			

Dates & Response

10) Date Contacted 12/06/2018 11) Date Replied 12/07/2018

( ) No Reply

( ) Replied/No Interest

( ) Replied/Have Interest

(X) Replied/Other

Tribe/NHO Contacted Through TCNS

3) Tribe/NHO FRN:

4) Tribe/NHO Name: **Upper Sioux Community of Minnesota**

Contact Name

5) First Name: **Samantha**	6) MI:	7) Last Name: **Odegard**	8) Suffix:
9) Title: **THPO**			

Dates & Response

10) Date Contacted 12/05/2018 11) Date Replied

(X) No Reply

( ) Replied/No Interest

( ) Replied/Have Interest

( ) Replied/Other

Tribal/NHO Involvement

1) Have Indian Tribes or Native Hawaiian Organizations (NHOs) been identified that may attach religious and cultural significance to historic properties which may be affected by the undertaking within the APEs for direct and visual effects?	(X) Yes ( ) No

2a) Tribes/NHOs contacted through TCNS Notification Number: 180995 Number of Tribes/NHOs: 32

2b) Tribes/NHOs contacted through an alternate system: Number of Tribes/NHOs: 0

Tribe/NHO Contacted Through TCNS

3) Tribe/NHO FRN:

4) Tribe/NHO Name: **Winnebago Tribe of Nebraska**

Contact Name

5) First Name: **Randy**	6) MI:	7) Last Name: **Teboe**	8) Suffix:
9) Title: **CPD/THPO**			

Dates & Response

10) Date Contacted 12/06/2018 11) Date Replied _____

(X) No Reply

( ) Replied/No Interest

( ) Replied/Have Interest

( ) Replied/Other

Tribe/NHO Contacted Through TCNS

3) Tribe/NHO FRN:

4) Tribe/NHO Name: **Wyandotte Nation**

Contact Name

5) First Name: **Sherri**	6) MI:	7) Last Name: **Clemons**	8) Suffix:
9) Title: **THPO**			

Dates & Response

10) Date Contacted 12/06/2018 11) Date Replied _____

(X) No Reply

( ) Replied/No Interest

( ) Replied/Have Interest

( ) Replied/Other

Other Tribes/NHOs Contacted

Tribe/NHO Information

1) FCC Registration Number (FRN):
2) Name:

Contact Name

3) First Name:	4) MI:	5) Last Name:	6) Suffix:
7) Title:			

Contact Information

8) P.O. Box:	**And /Or**	9) Street Address:		
10) City:			11) State:	12) Zip Code:
13) Telephone Number:		14) Fax Number:		
15) E-mail Address:				
16) Preferred means of communication: ( ) E-mail ( ) Letter ( ) Both				

Dates & Response

17) Date Contacted _____ 18) Date Replied _____

( ) No Reply

( ) Replied/No Interest

( ) Replied/Have Interest

( ) Replied/Other

Historic Properties

Properties Identified

1) Have any historic properties been identified within the APEs for direct and visual effect?	( ) Yes (X) No
2) Has the identification process located archaeological materials that would be directly affected, or sites that are of cultural or religious significance to Tribes/NHOs?	( ) Yes (X) No
3) Are there more than 10 historic properties within the APEs for direct and visual effect? If "Yes", you are required to attach a Cultural Resources Report in lieu of adding the Historic Property below.	( ) Yes (X) No

Historic Property

4) Property Name:
5) SHPO Site Number:

Property Address

6) Street Address:		
7) City:	8) State:	9) Zip Code:
10) County/Borough/Parish:		

Status & Eligibility

11) Is this property listed on the National Register? Source: _____	( ) Yes ( ) No
12) Is this property eligible for listing on the National Register? Source: _____	( ) Yes ( ) No
13) Is this property a National Historic Landmark?	( ) Yes ( ) No

14) Direct Effects (Select One):

( ) No Effect on this Historic Property in APE

( ) No Adverse Effect on this Historic Property in APE

( ) Adverse Effect on this Historic Property in APE

15) Visual Effects (Select One):

( ) No Effect on this Historic Property in APE

( ) No Adverse Effect on this Historic Property in APE

( ) Adverse Effect on this Historic Property in APE

Local Government Involvement

Local Government Agency

1) FCC Registration Number (FRN):	
2) Name: **Casnovia Township**	

Contact Name

3) First Name: **Ruth Ann**	4) MI:	5) Last Name: **Bull**	6) Suffix:
7) Title: **Office Administrator**			

Contact Information

8) P.O. Box:	**And /Or**	9) Street Address: **245 Canada Road**	
10) City: **Casnovia**		11) State: **MI**	12) Zip Code: **49318**
13) Telephone Number: **(616)675-5611**		14) Fax Number:	
15) E-mail Address: **office@castwp.com**			

16) Preferred means of communication:

(**X**) E-mail

( ) Letter

( ) Both

Dates & Response

17) Date Contacted **12/07/2018** 18) Date Replied _____

(**X**) No Reply

( ) Replied/No Interest

( ) Replied/Have Interest

( ) Replied/Other

Additional Information

19) Information on local government's role or interest (optional):

Other Consulting Parties

Other Consulting Parties Contacted

1) Has any other agency been contacted and invited to become a consulting party?	(**X**) Yes ( ) No

Consulting Party

2) FCC Registration Number (FRN):
3) Name: **Muskegon County Historical Society**

Contact Name

4) First Name: **Mark**	5) MI:	6) Last Name: **Fairchild**	7) Suffix:
8) Title:			

Contact Information

9) P.O. Box:	**And /Or**	10) Street Address: **173 East Apple Avenue**		
11) City: **Muskegon**			12) State: **MI**	13) Zip Code: **49442**
14) Telephone Number: **(231)724-6271**		15) Fax Number:		
16) E-mail Address: **fairchildma@co.muskegon.mi.us**				

17) Preferred means of communication:

(**X**) E-mail

( ) Letter

( ) Both

Dates & Response

18) Date Contacted **12/07/2018**

19) Date Replied _____

(**X**) No Reply

( ) Replied/No Interest

( ) Replied/Have Interest

( ) Replied/Other

Additional Information

20) Information on other consulting parties' role or interest (optional):

Designation of SHPO/THPO

1) Designate the Lead State Historic Preservation Officer (SHPO) or Tribal Historic Preservation Officer (THPO) based on the location of the tower.

SHPO/THPO

Name: **Michigan Historical Center**

2) You may also designate up to three additional SHPOs/THPOs if the APEs include multiple states. If the APEs include other countries, enter the name of the National Historic Preservation Agency and any state and provincial Historic Preservation Agency.

SHPO/THPO Name: _____

SHPO/THPO Name: _____

SHPO/THPO Name: _____

Certification

I certify that all representations on this FCC Form 620 Submission Packet and the accompanying attachments are true, correct, and complete.

Party Authorized to Sign

First Name: **Lauren**	MI:	Last Name: **Sereno**	Suffix:

Signature: **Lauren Sereno**	Date: **12/20/2018**

FAILURE TO SIGN THIS APPLICATION MAY RESULT IN DISMISSAL OF THE APPLICATION AND FORFEITURE OF ANY FEES PAID.

WILLFUL FALSE STATEMENTS MADE ON THIS FORM OR ANY ATTACHMENTS ARE PUNISHABLE BY FINE AND/OR IMPRISONMENT (U.S. Code, Title 18, Section 1001) AND/OR REVOCATION OF ANY STATION LICENSE OR CONSTRUCTION PERMIT (U.S. Code, Title 47, Section 312(a)(1)), AND/OR FORFEITURE (U.S. Code, Title 47, Section 503).

Attachments :

Type	Description	Date Entered
Resumes/Vitae	1. Resumes	12/20/2018
Photographs	2. Photos	12/20/2018
Map Documents	3. Maps	12/20/2018
Additional Site Information	4. Additional site info	12/20/2018
Area of Potential Effects	5. APE w cultural resource report	12/20/2018
Tribal/NHO Involvement	6. Tribal	12/20/2018
Historic Properties for Direct Effects	7. Direct effects	12/20/2018
Historic Properties for Visual Effects	8. Visual effects	12/20/2018
Local Government Involvement	9. Local gov	12/20/2018
Public Involvement	10. Public involvement	12/20/2018
State-Specific Forms	11. State specific forms	12/20/2018
Other	Cover letter	12/20/2018

Attachment 1. Consultant Information

Curriculum Vitae

Mark C. Branstner, RPA

Education

Wayne State University, Detroit, Michigan

M.A., Anthropology, with Specialization in Historical Archaeology (1984)
B.A., Anthropology (1978)

Current Employment

Illinois State Archaeological Survey, Prairie Research Institute
University of Illinois at Urbana-Champaign

Position: Senior Historical Archaeologist
Statewide (2005-Present)

Consulting Employment

Great Lakes Research, Inc.,

Position: Owner / Principal Investigator (1985-Present)

Professional Certification

Register of Professional Archaeologists

State of Illinois (SHPO): Qualified prehistoric archaeologist; historic archaeologist

State of Indiana, Department of Natural Resources (SHPO): Qualified principal investigator; prehistoric archaeologist; historic archaeologist

State of Iowa (SHPO): No longer updates qualified firm list.

State of Michigan, Department of History, Arts, and Libraries (SHPO):
Qualified prehistoric archaeologist; historic archaeologist; historian

State of Missouri (SHPO): Listing as qualified CRM firm.

State of Ohio (SHPO): Qualified prehistoric archaeologist; historic archaeologist

State of Wisconsin (SHPO): Qualified prehistoric archaeologist; historic archaeologist

Professional Memberships

Register of Professional Archaeologists
(Standards Board, 2012-2015)

Society for Historical Archaeology

Midwest Archaeological Conference

Illinois Archaeological Survey

Illinois Association for Advancement of Archaeology

Conference on Michigan Archaeology
(Trustee 1994-1996; Secretary 1997-2004)

Michigan Archaeological Society
(President 1985; Chairman/Editorial Board 1999-2006; President 2005)

Contact Information

Business Address: Great Lakes Research, Inc.
P.O. Box 2341, Champaign IL 61825-2341

Business Telephone: 1.217.549.6990

E-mail: mark.branstner@glrinc.org

TRILEAF™

PROFESSIONAL RESUME

LAUREN SERENO

PROJECT SCIENTIST

Education

B.S. Environmental Science
Lewis University / Romeoville, IL

Areas of Expertise

Ms. Sereno has experience performing site inspections and conducting environmental due diligence pursuant to EPA All Appropriate Inquiries (AAI) and the American Society of Testing and Materials (ASTM), as well as performing National Environmental Policy Act (NEPA) and National Programmatic Agreement (NPA) reviews for commercial real estate, lending, and wireless telecommunications projects.

Environmental service expertise includes:

Phase I Environmental Site Assessments
Historical City Directories
Indoor Air Quality Assessments
Information Section 7 Consultation
National Wetland Inventory Maps
Flood Insurance Rate Maps
Critical Habitat Maps
Environmental Evaluation Summaries
Archaeological and Architectural Impacts
Soil Characterization
Preliminary Risk Assessments
Field Reconnaissance
Section 106 Compliance
NEPA Environmental Assessments
Migratory Bird Evaluations
Form 620/621 Submittals
Historical Topographic Maps and Aerial Imagery
Mold and Lead-Based Paint Surveys
Soil and Groundwater Management Plans
Local Government Consultation
Native American Consultation
Land Use History

Attachment 2. Site Information – Photographs

You are required to provide photographs and maps as part of this filing. Additional site information can be provided in an optional attachment.

Photograph Requirements:

Except in cases where no Historic Properties were identified within the Areas of Potential Effects, submit photographs as described below. Photographs should be in color, marked so as to identify the project, keyed to the relevant map or text, and dated; the focal length of the lens and the height of the camera should be noted. The source of any photograph included but not taken by the Applicant or its consultant (including copies of historic images) should be identified on the photograph.

a. **Photographs taken from the site should show views from the proposed location in all directions. The direction (e.g., north, south, etc.) should be indicated on each photograph, and, as a group, the photographs should present a complete (360 degree) view of the area around the proposed site.**

   Please see attached Photographs, which were taken by Great Lakes Research, Inc. on the 12 December 2018, unless otherwise noted.

b. **Photographs of all listed in and eligible properties within the Areas of Potential Effects.**

   N/A

c. **If any listed or eligible properties are visible from the proposed site, photographs looking at the site from each historic property. The approximate distance in feet (meters) between the site and the historic property should be included. If any listed or eligible properties are within the APE, photos looking at each historic property should be included.**

   N/A

Include aerial photos of the APE for visual effects, if available. There are a variety of publicly available websites that provide aerial photographs.

Aerial photograph of the site was obtained by using Google Earth.

	1. View to east towards gated entry to existing/proposed access easement. Note that entire access road is asphalt-paved.
	2. View to east from gated entry along existing/proposed access easement.

	3. View further to east along existing/proposed access easement.
	4. View to northeast along existing/proposed easement.

	5. View to NNE along existing/proposed access easement towards proposed project site; note how access road splits in distance.
	6. Staked centerpoint of cell tower lease area.

	7. View to southwest across proposed project site.
	8. View to northwest across proposed project site.

	9. View to northeast across proposed project site.
	10. View to southeast across proposed project site.

	11. View to north from center of proposed project site.
	12. View to east from center of proposed project site.

	13. View to south from center of proposed project site.
	14. View to west from center of proposed project site.

	15. Typical 40-cm diameter shovel test unit at center of cell tower lease area (STU 3).
	16. Modern brick debris near northeast corner of cell tower lease area, with Portland cement adhering.

	17. View to south along M-37 towards proposed project site from point near north limit of 1.5-mile radius Visual APE.
	18. View to west along White Rd./20 Mile Rd. towards proposed project site from east limit of 1.5-mile radius Visual APE.

	19. View to east along White Rd. towards proposed project site from west limit of 1.5-mile radius Visual APE.
	20. View to north along M-37 towards proposed project site from south limit of 1.5-mile radius Visual APE.

Attachment 3. Site Information – Map Requirements

Include one or more 7.5-minute quad USGS topographical maps that:

a. **Identify the Areas of Potential Effects for both Direct and Visual Effects. If a map is copied from the original, include a key with the name of quad and date.**
b. **Show the location of the proposed site and any access roads or other easements including excavations.**
c. **Show the locations of each property listed.**
d. **Include keys for any symbols, colors, or other identifiers.**
e. **Submit color maps whenever possible.**

The following map has been attached to this report:

(1) Topographic map, with proposed project site location, 1.5-mile radius Visual APE, and photo key.

(2) Aerial photo with 1.5-mile radius Visual APE.

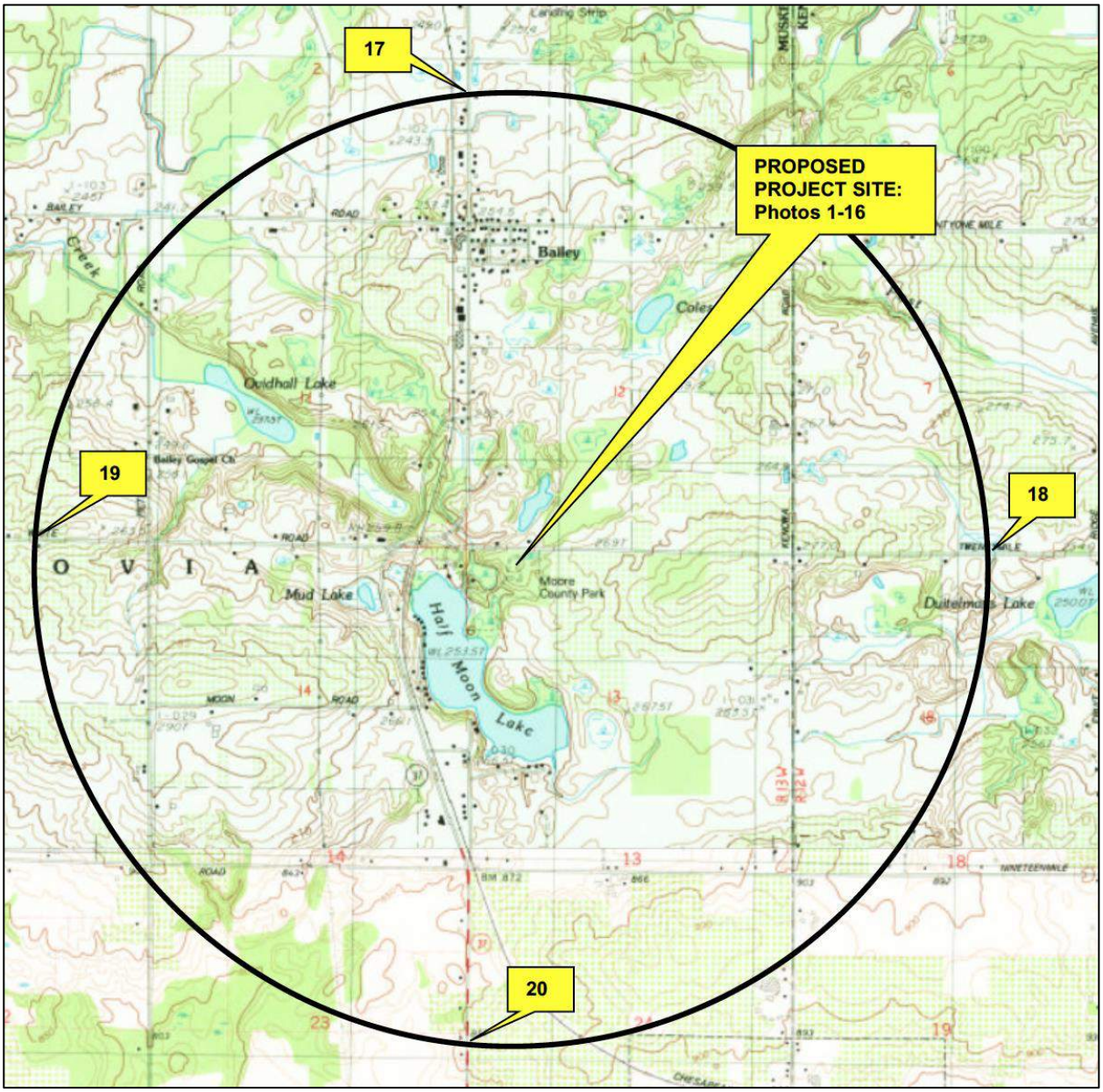

Figure 1. **Topographic map with proposed project site location, 1.5-mile radius Visual APE, and photo key (*Grant, MI* 7.5-min quadrangle map [USGS 1985]).**

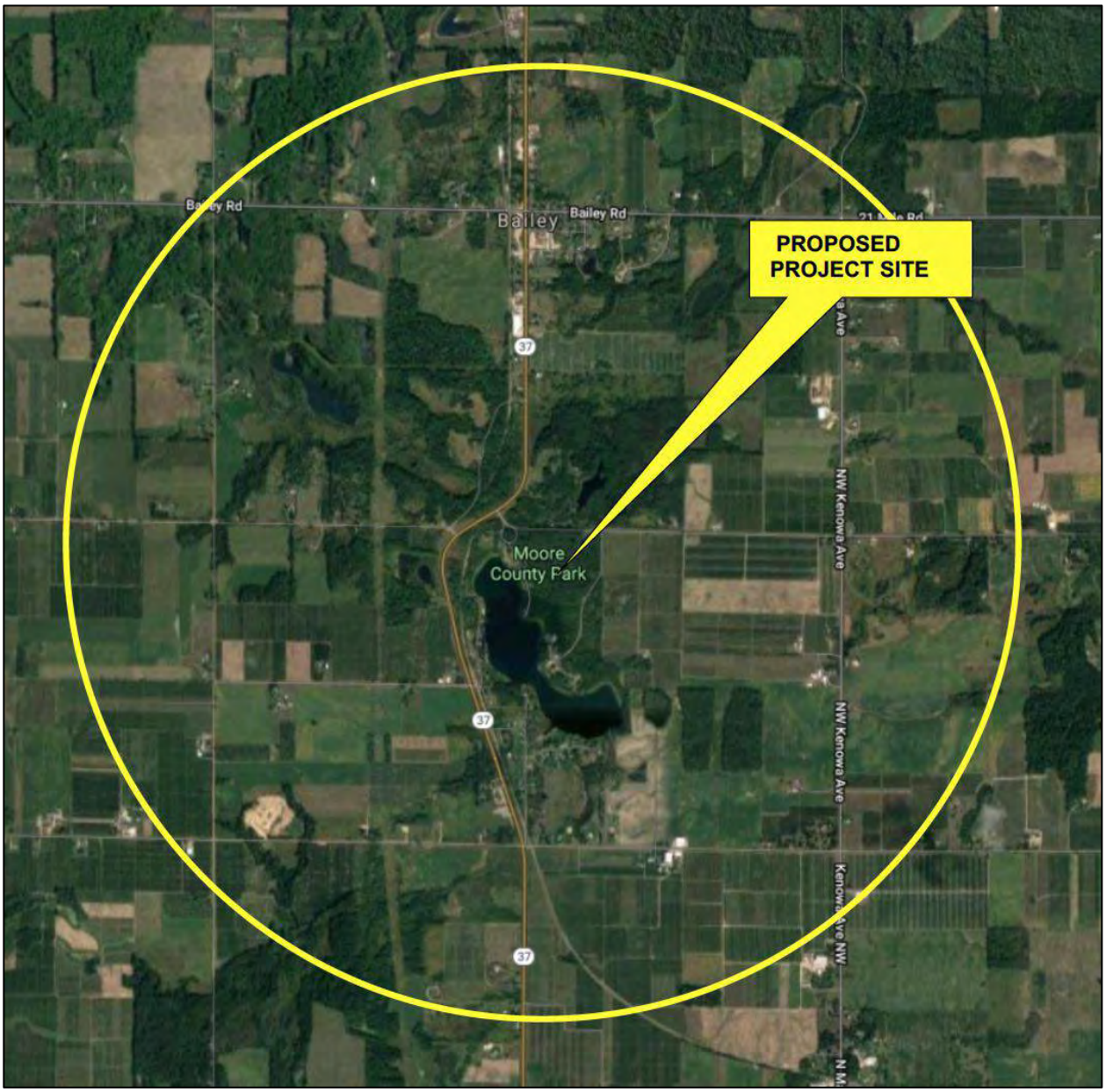

Figure 2. **Aerial photo with 1.5-mile radius Visual APE (Google Maps 2018).**

Please refer to Appendix B for Site Maps

Attachment 4. Site Information – Additional Site Information

Describe any additional structures, access roads, utility lines, fences, easements, or other construction planned for the site.

The project is located at White Road, Bailey, Michigan 49303.

The project consists of the proposed construction of a 475-foot-tall (488-feet-overall) self-support telecommunications tower and associated equipment within a proposed 80-foot by 80-foot (6,400-square-foot) lease area. An approximately 12-foot-wide access easement is proposed to extend north from the north side of the proposed telecommunications compound into a proposed service vehicle turn-around, and then east approximately 83.4 feet to an existing access drive.

The construction drawings provided by *Pyramid Network Services* are included in this attachment.

Please refer to Appendix A for Site Plans

Attachment 5. Area of Potential Effects

You are required to provide two attachments regarding the Determination of Effect: Areas of Potential Effect and Mitigation of Effect (if applicable).

Areas of Potential Effect Guidelines:

a. **Describe the APE for direct effects and explain how this APE was determined.**

The APE for Direct Effects is defined as the area of potential ground disturbance and any property, or any portion thereof that will be physically altered or destroyed by the Undertaking. The project consists of the proposed construction of a new 475-ft (144.8-m) self-support cell tower (488-ft [148.7-m] with appurtenances) on an 80 x 80-ft (24.4 x 24.4-m) cell tower lease area. Access to the site will be provided an approximately 12-ft (3.7-m) wide access/utility easement that is proposed to extend north ~40 ft (12.2 m) from the north side of the proposed telecommunications compound into a proposed service vehicle turn-around, and then east ~80 ft (24.4-m) to an existing paved access drive. Total acreage of the existing and proposed cell tower site is approximately 0.18-acre (0.07-hectare).

b. **Describe the APE for visual effects and explain how this APE was determined.**

The APE for Visual Effects is the geographic area in which the Undertaking has the potential to introduce visual elements that diminish or alter the setting, including the landscape, where the setting is a character-defining feature of a historic property that makes it eligible for listing on the National Register. The presumed APE for Visual Effects for construction of new facilities is the area from which the tower will be visible: (a) within 0.5 miles from the tower site if the proposed Tower is 200 ft or less in overall height; (b) within 0.75 mile from the tower site if the proposed Tower is more than 200 ft, but no more than 400 ft in overall height; or (c) within 1.5 miles from the proposed tower site if the proposed Tower is more than 400 ft in overall height.

Due to the overall height of the proposed tower (488-ft), the presumed APE for Visual Effects for this project is a 1.5-mile radius from the tower site per the specifications of the FCC programmatic agreement.

Attachment 5. Continued

Mitigation of Effect Guidelines:

In the case of where an Adverse Visual Effect or Adverse Direct Effect has been determined you must provide the following:

a. **Copies of any correspondence and summaries of any oral communication with the SHPO/THPO and any consulting parties.**

   N/A

b. **Describe any alternatives that have been considered that might avoid, minimize, or mitigate any adverse effects. Explain the Applicant's conclusion regarding the feasibility of each alternative.**

   N/A

For each property identified as a Historic Property in the online e-106 form:

a. **Indicate whether the Applicant believes the proposed undertaking would have a) no effect; b) no adverse effect; or, c) an adverse effect. Explain how each such assessment was made. Provide supporting documentation where necessary.**

   N/A

CULTURAL RESOURCE INVENTORY SURVEY: PROPOSED CELL TOWER SITE – MOORE PARK – WHITE ROAD, BAILEY, MUSKEGON COUNTY, MICHIGAN 49303

A CULTURAL RESOURCE MANAGEMENT STUDY PREPARED UNDER CONTRACT WITH TRILEAF CORPORATION FOR SUBMISSION TO THE MICHIGAN STATE HOUSING DEVELOPMENT AUTHORITY

GREAT LAKES RESEARCH, INC.
ARCHAEOLOGY / CULTURAL RESOURCE MANAGEMENT

CULTURAL RESOURCE INVENTORY SURVEY: PROPOSED CELL TOWER SITE – MOORE PARK – WHITE ROAD, BAILEY, MUSKEGON COUNTY, MICHIGAN 49303

PREPARED AND SUBMITTED BY:

Mark C. Branstner, M.A., R.P.A.
Principal Investigator

Great Lakes Research, Inc.
1116 Dodge St.
Lake Geneva, WI 53147

GLR Report No. 2018-267

SUBMITTED TO:

Trileaf Corporation
1821 Walden Office Square, Suite 510
Schaumburg, IL 60173

Trileaf Job No. 646371

19 December 2018

The opinions, findings, and conclusions expressed in this document are those of the authors, Great Lakes Research, Inc., and are not necessarily those of Trileaf Corporation.

ABSTRACT AND MANAGEMENT SUMMARY

In December 2018, Great Lakes Research, Inc. (GLR) was contracted by Trileaf Corporation (Trileaf) of Schaumburg, Illinois to perform cultural resource inventory surveys for a new cell tower site in Moore County Park, Casnovia Township, Muskegon County, Michigan (NE¼ NW¼ NW¼ NW¼ Sec. 13, T10N R13W) (43.26266667, -85.80769444) (USGS 1985). The proposed project site is located in a wooded area along the north edge of Moore County Park, just south of White Road. This report is submitted under the Federal Communications Commission Programmatic Agreement (FCC 04-222) for new cell towers, as required by Sec. 106 of the National Historic Preservation Act of 1966 (16 US 470, as amended, 36 CFR 800).

The research included the preparation of a brief land use history and the performance of a Phase I archaeological survey for the construction of a new 475-ft (144.8-m) self-support cell tower (488-ft [148.7-m] with appurtenances) on an 80 x 80-ft (24.4 x 24.4-m) cell tower lease area. Access to the site will be provided by an approximately 12-ft (3.7-m) wide access/utility easement that is proposed to extend north ~40 ft (12.2 m) from the north side of the proposed telecommunications compound into a proposed service vehicle turn-around, and east ~80 ft (24.4-m) to an existing paved access drive. Total acreage of the existing and proposed cell tower site is approximately 0.18-acre (0.07-hectare).

This survey was requested by the Trileaf in response to the planned use of the above-described parcel and the potential impacts that such a use might represent to archaeological cultural resources. The general environmental setting was considered of moderately increased prehistoric and historic period Native American archaeological sensitivity due to its location on high ground to the north of Half Moon Lake. Archaeological sensitivities relative to Euro-American archaeological resources would appear most likely associated with nineteenth century lumbering and/or agricultural settlement. The Phase I cultural resource survey was designed to discover all prehistoric and historic period archaeological and architectural resources within the defined areas of direct and indirect effects.

Field survey of the project area, which included pedestrian reconnaissance and shovel testing, found no evidence for the presence of archaeological properties in relation to the current project area. No architectural resources had been previously identified in relation to either the direct or visual effects APE, and no new resources were noted as a result of the current project.

Based on these findings, GLR recommends that development activities associated with the development and long-term use of this cell tower site will have no effect, as there are no historic properties associated with the project area. It is therefore recommended that project clearance be granted with no further investigation or evaluation of the project area per cultural resources.

TABLE OF CONTENTS

Abstract and Management Summary ii

List of Figures iv

List of Tables iv

1.0 Introduction 1

2.0 Project Setting 5

3.0 Cultural Resource Sensitivity 7

- 3.1 Native American Archaeological Resources 7
- 3.2 Euro-American Archaeological Resources 7
- 3.3 Architectural Resources 10

4.0 Results of Field Investigations 11

- 4.1 Archival Research 11
- 4.2 Archaeological Field Research 11
- 4.3 Architectural Field Research 12

5.0 Conclusions and Recommendations 14

- 5.1 Conclusions 14
- 5.2 Recommendations 14

References Cited 15

Appendix A – Views of Project Area 17

LIST OF FIGURES

1. General location of project area 2
2. General schematic of proposed project area 3
3. Detailed schematic of proposed project area 4
4. Soil survey of project area 6
5. Project area ca. 1877 7
6. Project area ca. 1900 8
7. Plan view of proposed cell tower site and approximate shovel test locations 10

LIST OF TABLES

1. Previously recorded archaeological sites within one-mile radius of proposed project site 8
2. Shovel test descriptions 13

SECTION 1.0 - INTRODUCTION

In December 2018, Great Lakes Research, Inc. (GLR) was contracted by Trileaf Corporation (Trileaf) of Schaumburg, Illinois to perform cultural resource inventory surveys for a new cell tower site in Moore County Park, Casnovia Township, Muskegon County, Michigan (NE¼ NW¼ NW¼ NW¼ Sec. 13, T10N R13W) (43.26266667, -85.80769444) (Figure 1; USGS 1985). The proposed project site is located in a wooded area along the north edge of Moore County Park, just south of White Road. This report is submitted under the Federal Communications Commission Programmatic Agreement (FCC 04-222) for new cell towers, as required by Sec. 106 of the National Historic Preservation Act of 1966 (16 US 470, as amended, 36 CFR 800).

The research included the preparation of a brief land use history and the performance of a Phase I archaeological survey for the construction of a new 475-ft (144.8-m) self-support cell tower (488-ft [148.7-m] with appurtenances) on an 80 x 80-ft (24.4 x 24.4-m) cell tower lease area. Access to the site will be provided by an approximately 12-ft (3.7-m) wide access/utility easement that is proposed to extend north ~40 ft (12.2 m) from the north side of the proposed telecommunications compound into a proposed service vehicle turn-around, and east ~80 ft (24.4-m) to an existing paved access drive. Total acreage of the existing and proposed cell tower site is approximately 0.18-acre (0.07-hectare) (Figures 2-3).

This survey was requested by the Trileaf in response to the planned use of the above-described parcel and the potential impacts that such a use might represent to archaeological cultural resources. The general environmental setting was considered of moderately increased prehistoric and historic period Native American archaeological sensitivity due to its location on high ground to the north of Half Moon Lake. Archaeological sensitivities relative to Euro-American archaeological resources would appear most likely associated with nineteenth century lumbering and/or agricultural settlement. The Phase I cultural resource survey was designed to discover all prehistoric and historic period archaeological and architectural resources within the defined areas of direct and indirect effects.

Prefield archival research was conducted by the principal investigator, Mark C. Branstner (M.A. Anthropology, Wayne State University), as was field research and final report production. Mr. Branstner has been certified as meeting the Secretary of the Interior's Historic Preservation Professional Qualifications Standards for prehistoric and historic archaeology since 1986, and is currently certified by the Register of Professional Archaeologists. All work was completed from 4 – 19 December 2018.

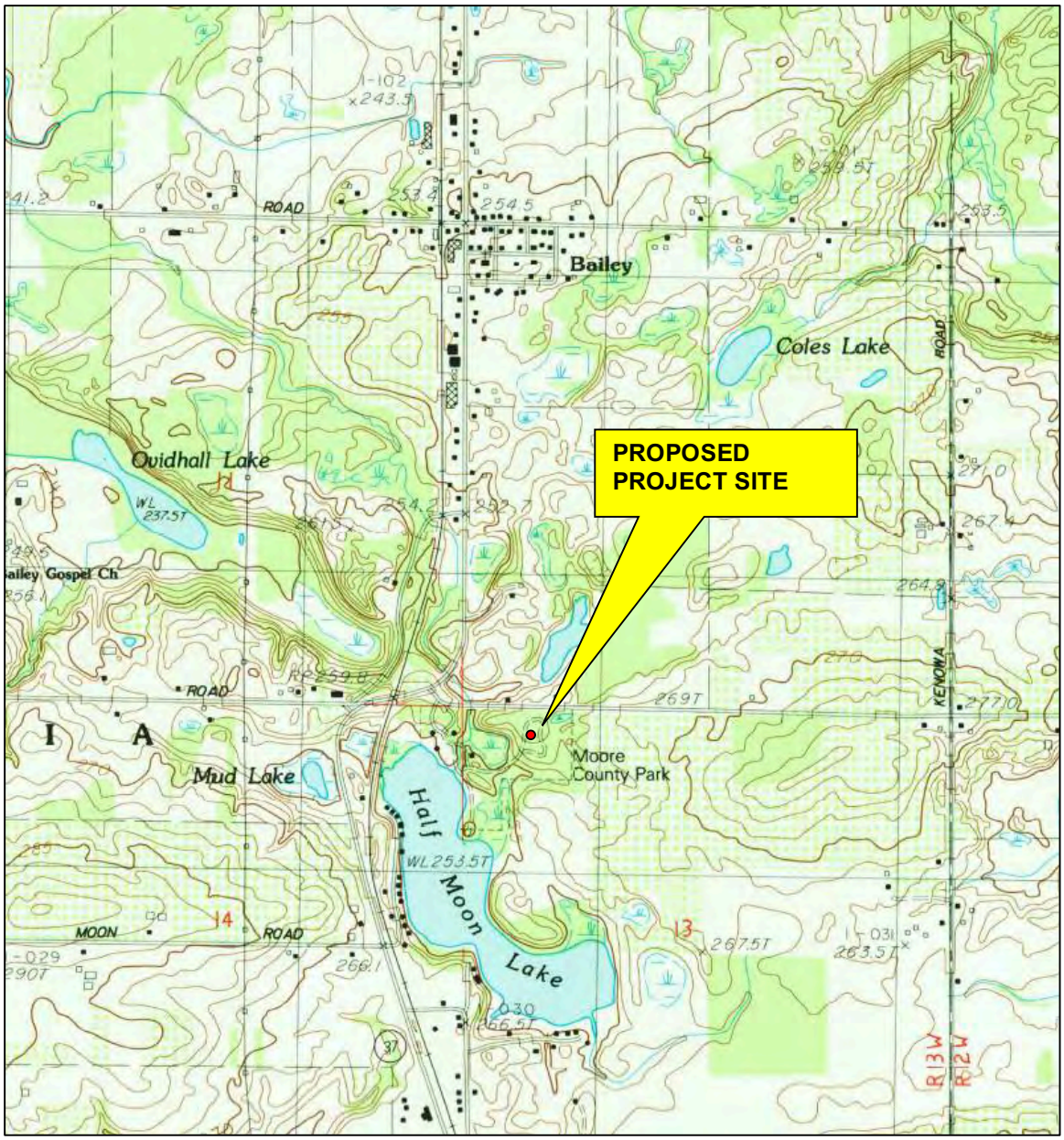

Figure 1. **General location of proposed project area (USGS 1985).**

Figure 2. General schematic of proposed project area (Trileaf 2018).

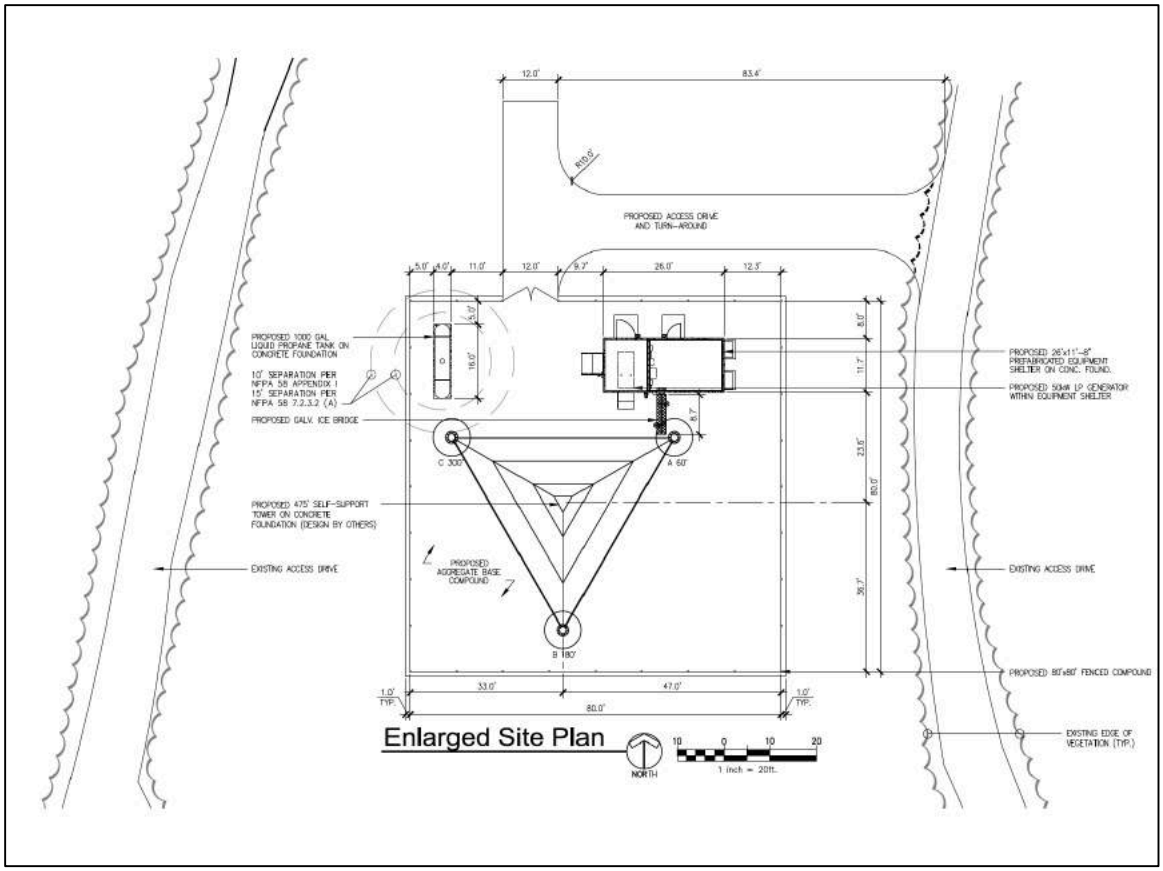

Figure 3. Detailed schematic of proposed project area (Trileaf 2018).

SECTION 2.0 - PROJECT SETTING

According to the on-line version of the *Regional Landscape Ecosystems of Michigan, Minnesota, and Wisconsin*, the project area lies within the Jamestown Sub-Subsection (VI.3.3) of the Allegan Subsection (VI.3) of the Southern Lower Michigan Section (VI) (Albert 1995).

The Jamestown Subsection consists of broad, gently sloping ridges, but a few steep slopes occur, especially in the northeast. The highest steep ridges are approximately 200 feet high. Most of the soils are clayey, with high water-holding capacity and low permeability. Surface soil horizons are generally loamy, and well drained and somewhat poorly drained soils are predominant. Elevations range from 640 to 972 feet (195 to 296 m).

Soils specific to the proposed project area are Onekama loam, Lake Michigan Lobe, on either 2-6 percent slopes (Neb) or 6-12 percent slopes (NeC) (Figure 4; NRCS 2018). The Onekama series consists of very deep, well drained soils formed in loamy and/or clayey till on end moraines, ground moraines, and till plains. Slope ranges from 2 to 50 percent (NCSS 2016).

Elevations within a few miles of the proposed project site range from approximately 728 - 965 ft (222 - 294 m) above mean sea level (AMSL). Natural elevations within the current project area are estimate as 873 ft (266.0 m) AMSL based on USGS contour mapping.

Drainage is southwest to Half Moon Lake, then northwest to Ovidhall Lake and Ovidhall Creek, then to Crockery Creek, a tributary of the Grand River, which drains into Lake Michigan at Grand Haven.

Given the general environmental setting and elevation, it can be presumed that the entire project area would have been continuously habitable since ca. 10,000 B.C. and the final retreat of the glacial ice.

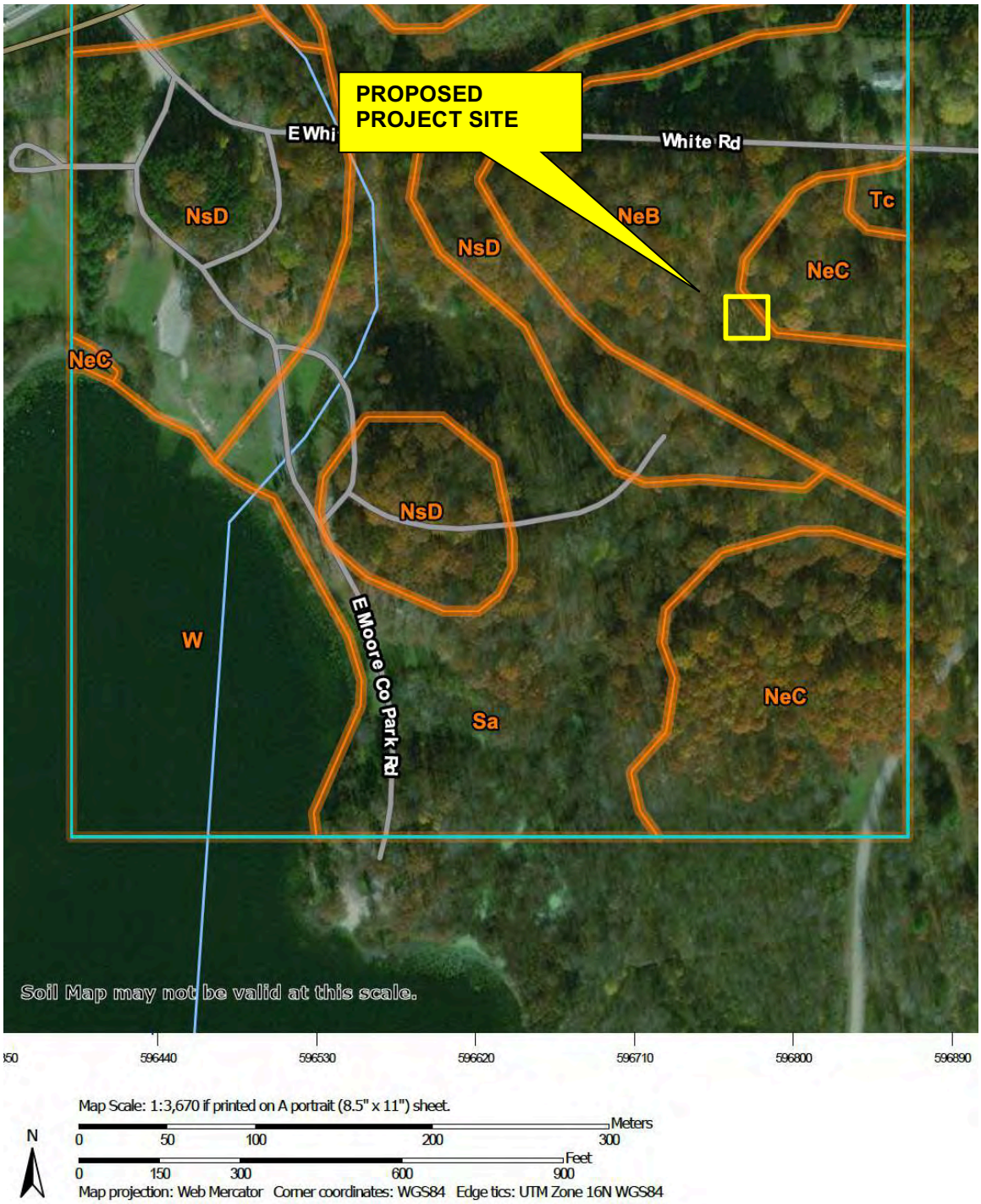

Figure 4. **Soil survey of project area (NRCS 2018).**

SECTION 3.0 – CULTURAL RESOURCE SENSITIVITY

3.1 Native American Archaeological Resources

Muskegon County has witnessed Native American occupation and utilization since Paleoindian times (ca. 10,000 B.C.). Farmers and amateur archaeologists have discovered and collected hundreds of archaeological sites within this region, although the vast majority of these remain to be recorded in the State of Michigan's archaeological site files.

As in other areas of the state, prehistoric archaeological sensitivities can be expected to be highly correlated to the preferred use of elevated, well-drained sandy ground adjacent to some aquatic resource as the idealized settlement and land utilization pattern (Branstner and Prahl 1984). Drainage basin surveys conducted throughout south-central and southeast Michigan have corroborated the general validity of that model (e.g., Branstner 1985; Lovis et al. 1979; Peebles and Krakker 1976; Peebles et al. 1975). These studies have further suggested that the utilization of these interior moraine and outwash areas by prehistoric peoples was probably for the extraction of specialized seasonal food resources by small groups, rather than as an economic base for larger sedentary populations. Analysis of diagnostic cultural materials recovered from sites in this interior upland region suggests that while the region was utilized throughout the last 12,000 years, a major emphasis of this utilization was during the Late Archaic and Late Archaic-Early Woodland transitional period, roughly from 3500 B.C. through A.D. l.

According to the MSHDA archaeological site files, only two archaeological surveys that yielded positive results have been recorded within a one-mile radius of the current project site. Both focused on the M-37 Bailey Bridge replacement project, including the original Phase I survey (Chavez 1980) and the subsequent Phase II evaluations of multiple sites (Prahl and Branstner 1983).

A total of six archaeological sites have been recorded within the same one-mile radius area. Included site types included mounds, camps, and small lithic scatters, with datable components attributed to the Early Woodland, Middle Woodland, and generalized Woodland (Table 1). All were associated with areas surrounding Half Moon Lake.

As the project area is generally similar to those areas that were surveyed during the M-37 Bailey Bridge project, an enhanced sensitivity for the presence of Native American archaeological resources can be assumed.

3.2 Euro-American Archaeological Resources

According to the on-line version of the General Land Office records, there are no recorded sales for the underlying property, although sales in the remainder of the township (T10N R13W) – with four exceptions – were all recorded in the 1850s (Bureau of Land Management, U. S. Department of the Interior 2018).

Site No.	Site Type	Temporal/Cultural Affiliation	Distance/Direction from Project	Notes
20MU35	Mounds (n=3)	Woodland	0.65-mile SSW	Hinsdale (1931); leveled
20MU72	Camp	Middle Woodland	0.5-mile NW	-
20MU73	Lithic scatter; farm	Unk. Prehistoric; 19th C. Euro-American	0.25-mile NW	-
20MU74	Lithic scatter	Unk. Prehistoric	0.5-mile W	-
20MU75	Lithic scatter; historic scatter and/or land use	Early Woodland, Middle Woodland; 20th C. Euro-American	0.5-mile W	-
20MU82	Lithic scatter	Unk. Prehistoric	0.25-mile W	-

Table 1. Previously recorded archaeological sites within one-mile radius of proposed project site.

The earliest structurally annotated map of the project area was published in 1877 (Figure 5; Beers 1877). At that date, it is apparent that surrounding areas of Casnovia Township had begun to be taken over by farmers, although much acreage remained in larger, presumably cut-over timber holdings. At that date, the proposed project site and the entire NW¼ Sec. 13 was held by the Hayward Bros., as were other nearby properties; no structures were indicated on any of these holding and is assumed that the properties were either lumber holdings or recently cut-over holdings.

By 1900, the proposed project site was still situated within the undivided NW¼ Sec. 13, but with ownership then in the hands of C. F. Nason (Figure 6; Ogle and Co. 1900). Although no structural improvements were noted in relation to the subject property at that date, it appears that nearly all of the surrounding acreage had been divided in smaller holdings, presumably for farming.

As late as 1958, the subject property was depicted both as structurally undeveloped and largely wooded (USGS 1958). At some point in time, presumably between 1958 and 1985, the area was set aside as the Moore County Park, and remains in that use to the present day.

As presented above, historic period Euro-American archaeological sensitivities relative to the current project area appear to be exclusively associated with lumbering and agricultural settlement and land use, which was primarily initiated in the post-1850 period. However, there is no evidence for the archaeologically significant use of the underlying property at any point during the past 150+ years.

There are at least two sites with identified Euro-American components within a one-mile radius of the proposed project site (Table 1).

Figure 5. **Project area ca. 1877 (Beers 1877).**

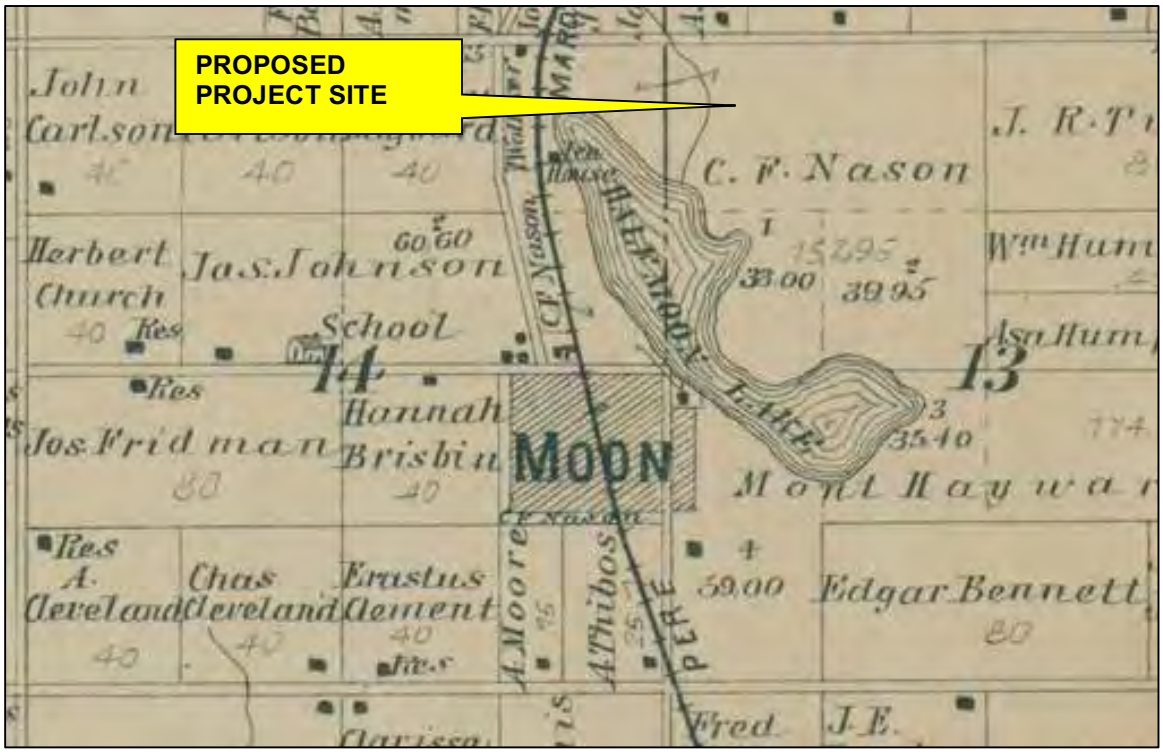

Figure 6. **Project area ca. 1900 (Ogle and Co. 1900).**

3.3 Architectural Resources

The APE for visual effects is the geographic area in which the project has the potential to introduce visual elements that diminish or alter the setting, including the landscape, where the setting is a character-defining feature of a historic property that makes it eligible for listing on the National Register. Due to the height of the proposed tower (488-ft), the APE for visual effects for this project is 1.5-mile radius from the tower site per the FCC programmatic agreement.

Based on a review of on-line database files through the National Register Information System website (http://nrhp.focus.nps.gov/) and an on-site inspection of the Michigan State Housing Development Authority's architectural historic property files (http://www.mcgi.state.mi.us/hso/) in December 2018, no architectural historic properties had been previously identified within either the APE for direct effects or the 1.5-mile radius APE for visual effects.

SECTION 4.0 - RESULTS OF FIELD INVESTIGATIONS

4.1 Archival Research

Field investigations were preceded by a period of archival research to determine what if anything could be predictively said per prehistoric or historic archaeological sensitivities prior to the onset of fieldwork. To assess prehistoric research potentials, the MSHDA site files and holdings were reviewed. To assess historic period archaeological potentials, the holdings of the Library of Michigan in Lansing were also examined. Materials examined included maps, atlases, plat books and county records. The results of these researches have been presented in the preceding section.

4.2 Archaeological Field Research

Field investigations were conducted by GLR on 12 December 2018. Standard archaeological field equipment included shovels, 0.25-inch mesh hand screens, and Silva compasses. The preferred field survey technique for such surveys is typically a combination of walkover reconnaissance (5-m intervals) and shovel testing (10-15 m intervals), with a standard shovel test unit consisted of a hand-excavated hole, approximately 40-cm in diameter and deep enough to reach culturally sterile subsoils.

Fieldwork was initiated with a general visual inspection of the proposed project area (see project area photos in Appendix A). Access to the site was provided by a gated, asphalt-paved trail leading east from the shore of Half Moon Lake, within the boundaries of Moore County Park. Approximately 500 ft (152 m) to the northeast along that trail, the trail forks off to the northwest and east, forming a large loop, with the proposed project site located within that loop (Figure 2). The project setting is gently undulating and wooded, with an overstory of large hardwoods and a relatively open, but leaf-covered forest floor. A very light snow cover was present over most of the area, but at least 50 percent of the forest floor remained visible and all ground contours were readily apparent. As there was zero percent ground surface visibility, survey relied on a combination of pedestrian survey and systematic shovel testing.

Following completion of the pedestrian reconnaissance, which noted only limited dumping of architectural debris (bricks), the staked 80 x 80-ft (24.4 x 24.4-m) cell tower lease area was shovel tested with a grid of five shovel test units – one in each corner and one in the center (STU 1-5) – effectively testing the proposed project site and a 25-ft (7.6-m) buffer on all sides that included the majority of the proposed access/utility easement along the north side of the lease area (Figure 7).

All shovel test units revealed what appeared to be a natural stratigraphy of dark grayish brown (10YR4/2) sandy loam, overlying a very pale brown (10YR7/3) silty clay, mottled with slightly darker silty clays (Table 2). Given the hummocky nature of the area, it appears unlikely that the project site had been agriculturally plowed in the past. The observed soil profiles were generally consistent with the described Onekama series (NCSS 2016).

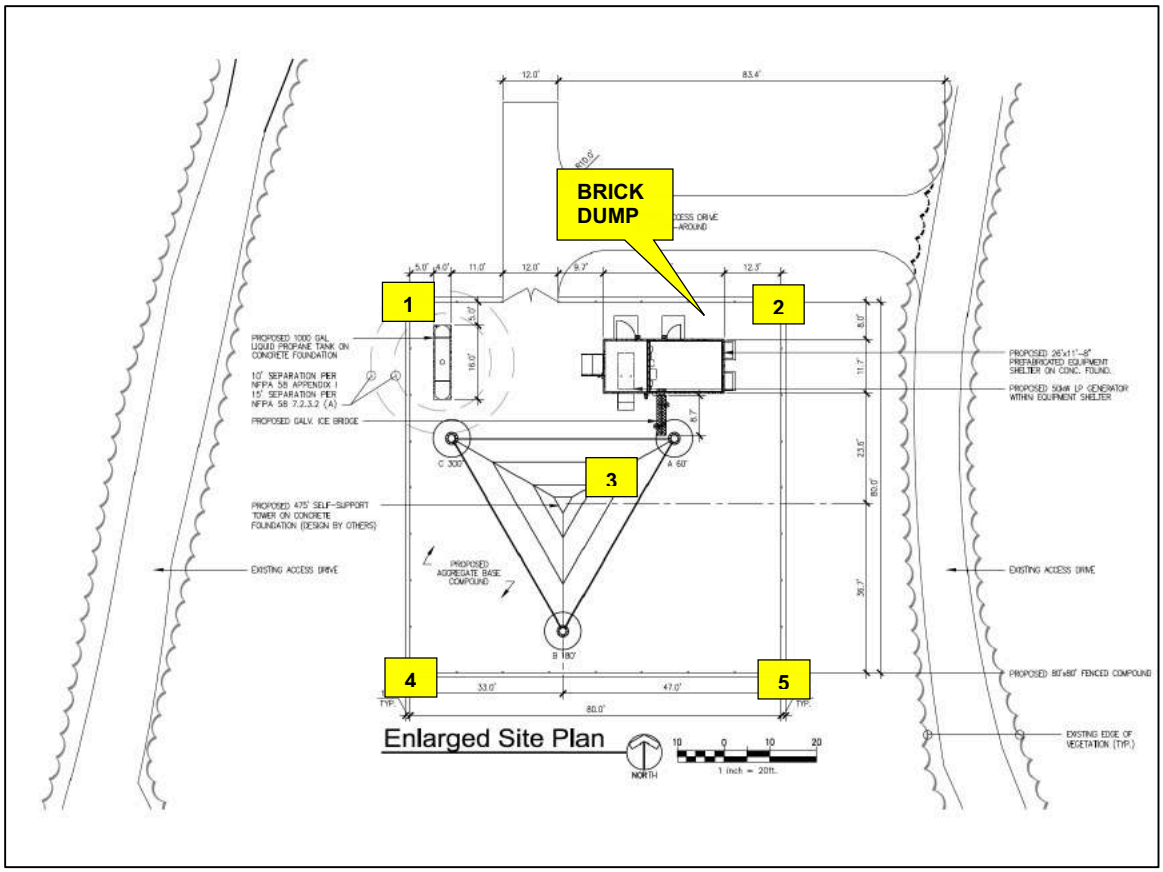

Figure 7. **Plan view of proposed cell tower site and approximate shovel test locations in yellow (Trileaf/GLR 2018).**

No archaeological materials, prehistoric or historic, were noted during pedestrian reconnaissance or shovel testing, other than the observed bricks. As the bricks did not appear particularly old and were not associated with any other surface manifestations, they were considered to be the result of local dumping and were not granted an archaeological site number

Total archaeological field time: ~ 1.0 person-hour.

4.3 Architectural Field Research

As noted above, no architectural resources had been previously identified in relation to the direct or visual effects APE, and no new resources were noted as a result of the current project.

STU No.	STU Location	Depth (cm)	Soil Description	Artifacts Recovered
Cell Tower Lease Area				
1	NW Corner	0-18	Dark grayish brown (10YR4/2) sandy loam	None
		18-35	Very pale brown (10YR7/3) silty clay, mottled with slightly darker silty clays	
2	NE Corner	0-24	Dark grayish brown (10YR4/2) sandy loam	None
		24-40	Very pale brown (10YR7/3) silty clay, mottled with slightly darker silty clays	
3	Center	0-22	Dark grayish brown (10YR4/2) sandy loam	None
		22-35	Very pale brown (10YR7/3) silty clay, mottled with slightly darker silty clays	
4	SW Corner	0-20	Dark grayish brown (10YR4/2) sandy loam	None
		20-32	Very pale brown (10YR7/3) silty clay, mottled with slightly darker silty clays	
5	SE Corner	0-20	Dark grayish brown (10YR4/2) sandy loam	None
		20-35	Very pale brown (10YR7/3) silty clay, mottled with slightly darker silty clays	

Table 2. Shovel Test Descriptions.

SECTION 5.0 - CONCLUSIONS AND RECOMMENDATIONS

5.1 Conclusions

Prefield archival research had indicated that the general environmental setting was considered of increased prehistoric and historic period Native American archaeological sensitivity due to its location on the relatively high ground in association with a number of lakes and wetlands surrounding Half Moon Lake. Archaeological sensitivities relative to Euro-American archaeological resources would appear most likely associated with nineteenth century lumbering and agricultural settlement, although there was no direct evidence to support archaeologically significant use of the area during either the nineteenth or twentieth century.

Field survey of the project area, which included pedestrian reconnaissance and shovel testing, found no evidence for the presence of archaeological properties in relation to the current project area. No architectural resources had been previously identified in relation to either the direct or visual effects APE, and no new resources were noted as a result of the current project.

5.2 Recommendations

Based on these findings, GLR recommends that development activities associated with the development and long-term use of this cell tower site will have no effect, as there are no historic properties associated with the project area. It is therefore recommended that project clearance be granted with no further investigation or evaluation of the project area per cultural resources.

However, it should be noted that standard archaeological field survey techniques are probabilistic and are not particularly well-suited to identifying point resources, such as isolated burials. In the event that prehistoric or historic period human remains are identified during construction, all work should be immediately halted and the appropriate authorities notified, including local police and the State Archaeologist (Attn: Dr. Dean Anderson / 517-373-1618).

REFERENCES CITED

Albert, Dennis A.

1995 *Regional Landscape Ecosystems of Michigan, Minnesota, and Wisconsin: A Working Map and Classification*. Electronic resource, http://www.npwrc.usgs.gov/resource/habitat/rlandscp/index.htm (Version 03JUN1998), accessed December 2018. Gen. Tech. Rep. NC-178. U.S. Department of Agriculture, Forest Service, North Central Forest Experiment Station, St. Paul, Minnesota, and Northern Prairie Wildlife Research Center Online, Jamestown, North Dakota.

Beers, F. W.

1877 *County Atlas of Muskegon*, Michigan. F. W. Beers and Co., New York.

Branstner, Mark C.

1985 *Livingston County Archaeological Survey: National Register Grant S84:185*. U.S. Department of the Interior and the Michigan Department of State. Great Lakes Research, Okemos, Michigan.

Branstner, Mark C., and Earl J. Prahl

1984 *Resource Protection Planning Process: Southeast Michigan: The Late Woodland Context*. U.S. Department of the Interior and the Michigan Department of State. Caminos Associates, Bay City, Michigan.

Bureau of Land Management, U. S. Department of the Interior

2018 *General Land Office Records*. Electronic resource, http://www.glorecords.blm.gov/, accessed December 2018.

Chavez, Karen L. Mohr.

1980 *Report of the Archaeological Investigation and Survey for the Michigan Department of Transportation's Proposed M-37 Bailey Bridge Replacement Project, Muskegon County*. University of Michigan, Museum of Anthropology.

Lovis, W., R. Kingsley, P. Forsberg, and D. Hodges

1979 *The Looking Glass River Archaeological Project: 1979 Season*. Michigan State University Museum, Archaeological Survey Report 4l. E. Lansing.

National Cooperative Soil Survey

2016 *Onekama Series*. Electronic document, https://soilseries.sc.egov.usda.gov/OSD_Docs/O/ONEKAMA.html, accessed December 2018.

Natural Resources Conservation Service (NRCS)

2018 *Muskegon County*. Electronic document, http://websoilsurvey.nrcs.usda.gov/app/, accessed December 2018, Natural Resources Conservation Service, U.S. Department of Agriculture.

Ogle, George A., and Co.

1900 *Standard Atlas of Muskegon County, Michigan*. Chicago.

Peebles, C., and J. Krakker

1976 *The River Raisin Archaeological Survey. Season 2, 1976: A Preliminary Report*. University of Michigan, Museum of Anthropology, Ann Arbor.

Peebles, C., J. Sallade, J. Arnold, D. Braun, V. Steponaitis
1975 *The River Raisin Archaeological Survey. Season 1, 1975: A Preliminary Report*. University of Michigan, Museum of Anthropology, Ann Arbor.

Prahl, Earl J., and Mark C. Branstner
1983 *A Phase II Archaeological Survey of the Bailey Bridge Replacement Project, Muskegon County, Michi*gan. Caminos Associates, Inc.

U. S. Geological Survey (USGS)
1958 *Fremont, Mich*. Washington, D.C.

1985 *Grant, MI*. Reston, Virginia.

APPENDIX A – VIEWS OF PROJECT SITE

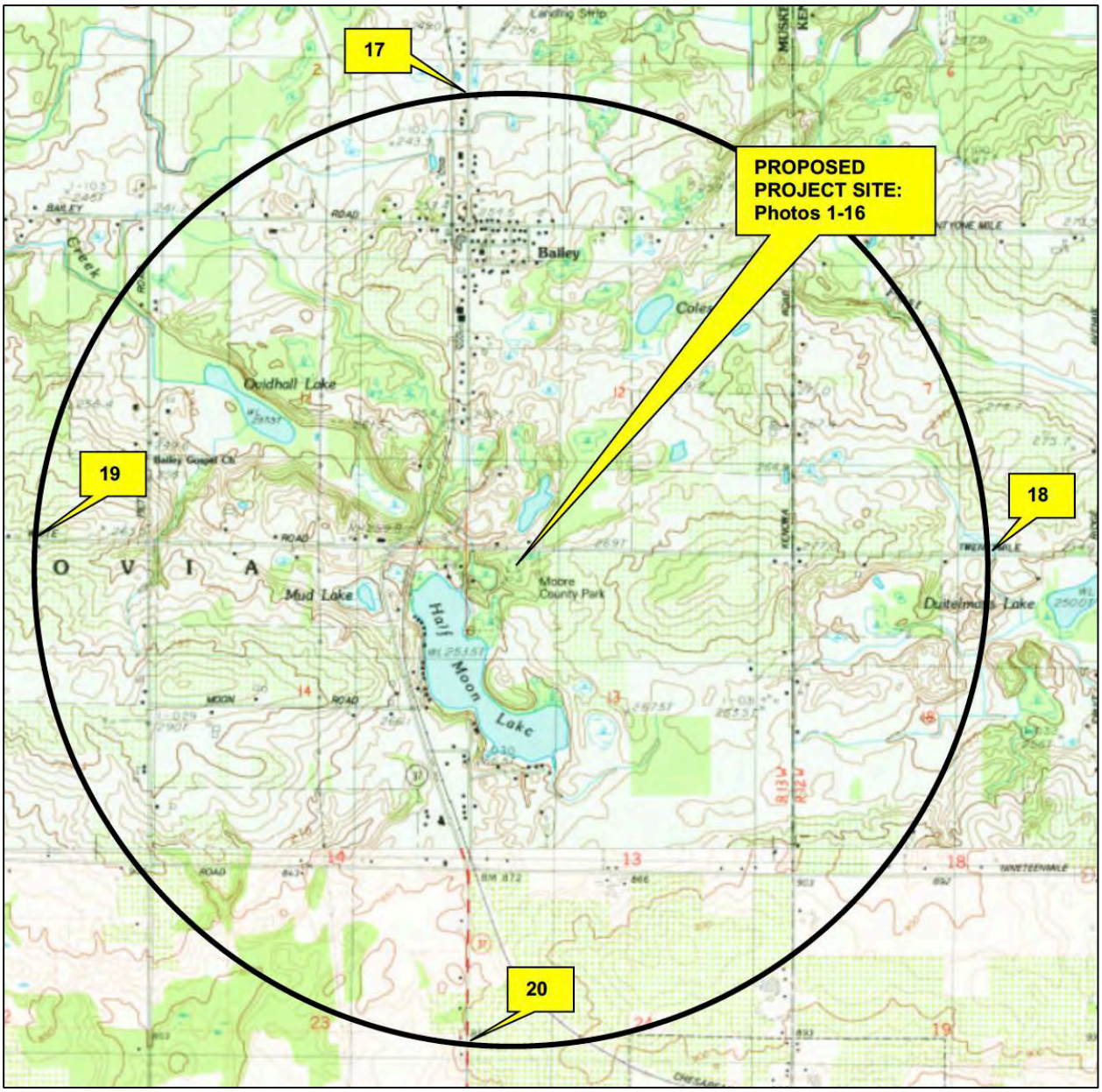

Topographic map with proposed project site location, 1.5-mile radius Visual APE, and photo key (*Grant, MI* 7.5-min quadrangle map [USGS 1985]).

	1. View to east towards gated entry to existing/proposed access easement. Note that entire access road is asphalt-paved.
	2. View to east from gated entry along existing/proposed access easement.

	3. View further to east along existing/proposed access easement.
	4. View to northeast along existing/proposed easement.

	5. View to NNE along existing/proposed access easement towards proposed project site; note how access road splits in distance.
	6. Staked centerpoint of cell tower lease area.

	7. View to southwest across proposed project site.
	8. View to northwest across proposed project site.

	9. View to northeast across proposed project site.
	10. View to southeast across proposed project site.

	11. View to north from center of proposed project site.
	12. View to east from center of proposed project site.

	13. View to south from center of proposed project site.
	14. View to west from center of proposed project site.

	15. Typical 40-cm diameter shovel test unit at center of cell tower lease area (STU 3).
	16. Modern brick debris near northeast corner of cell tower lease area, with Portland cement adhering.

	17. View to south along M-37 towards proposed project site from point near north limit of 1.5-mile radius Visual APE.
	18. View to west along White Rd./20 Mile Rd. towards proposed project site from east limit of 1.5-mile radius Visual APE.

	19. View to east along White Rd. towards proposed project site from west limit of 1.5-mile radius Visual APE.
	20. View to north along M-37 towards proposed project site from south limit of 1.5-mile radius Visual APE.

Attachment 6. Tribal and NHO Involvement

At an early stage in the planning process, the Nationwide Agreement requires the Applicant to gather information from appropriate Indian Tribes or Native Hawaiian Organizations ("NHOs") to assist in the identification of Historic Properties of religious and cultural significance to them. Describe measures taken to identify Indian tribes and NHOs that may attach religious and cultural significance to Historic Properties that may be affected by the construction within the Areas of Potential Effects ("APE") for direct and visual effects. If such Indian tribes or NHOs were identified, list them and provide a summary of contacts by either the FCC, the Applicant, or the Applicant's representative. Provide copies of relevant documents, including correspondence. If no such Indian tribes or NHOs were identified, please explain.

Trileaf Corporation completed the Tower Construction Notification System (TCNS) on December 4, 2018, and received the notification of interested tribes on December 7, 2018. The attached FCC Notification email lists the Tribes identified through the TCNS process. A second notice will be sent to all interested tribes/organizations, after a period of 30 days and the consultation process will continue per the FCC's guidelines. Any relevant comments from Tribes received by Trileaf will be forwarded to your office.

From: towernotifyinfo@fcc.gov
To: tribal
Cc: tcnsweekly@fcc.gov
Subject: NOTICE OF ORGANIZATION(S) WHICH WERE SENT PROPOSED TOWER CONSTRUCTION NOTIFICATION INFORMATION - Email ID #6120782
Date: Friday, December 7, 2018 2:03:06 AM

Dear Applicant:

Thank you for using the Federal Communications Commission's (FCC) Tower Construction Notification System (TCNS). The purpose of this electronic mail message is to inform you that the following authorized persons were sent the notification that you provided through TCNS, which relates to your proposed antenna structure. The information was forwarded by the FCC to authorized TCNS users by electronic mail and/or regular mail (letter). We note that the review period for all parties begins upon receipt of the Submission Packet pursuant to Section VII.A of the NPA and notifications that do not provide this serve as information only.

Persons who have received the notification that you provided include leaders or their designees of federally-recognized American Indian Tribes, including Alaska Native Villages (collectively "Tribal Nations"), Native Hawaiian Organizations (NHOs), and State Historic Preservation Officers (SHPOs). For your convenience in identifying the referenced Tribal Nations and NHOs and in making further contacts, the City and State of the Seat of Government for each Tribal Nation and NHO, as well as the designated contact person, is included in the listing below. We note that Tribal Nations may have Section 106 cultural interests in ancestral homelands or other locations that are far removed from their current Seat of Government. Pursuant to the Commission's rules as set forth in the Nationwide Programmatic Agreement for Review of Effects on Historic Properties for Certain Undertakings Approved by the Federal Communications Commission (NPA), all Tribal Nations and NHOs listed below must be afforded a reasonable opportunity to respond to this notification, consistent with the procedures set forth below, unless the proposed construction falls within an exclusion designated by the Tribal Nation or NHO. (NPA, Section IV.F.4).

The notification that you provided was forwarded to the following Tribal Nations and NHOs. A Tribal Nation or NHO may not respond until a full Submission Packet is provided. If, upon receipt, the Tribal Nation or NHO does not respond within a reasonable time, you should make a reasonable effort at follow-up contact, unless the Tribal Nation or NHO has agreed to different procedures (NPA, Section IV.F.5). In the event a Tribal Nation or NHO does not respond to a follow-up inquiry, or if a substantive or procedural disagreement arises between you and a Tribal Nation or NHO, you must seek guidance from the Commission (NPA, Section IV.G). These procedures are further set forth in the FCC's Second Report and Order released on March 30, 2018 (FCC 18-30).

1. FCC Compliance Officer Susie Fox - Spirit Lake Nation - (PO Box: 359) Fort Totten, ND - siouxz_05@hotmail.com; virginia.m.w.oboyle@gmail.com - 701-766-4031 - electronic mail
Exclusions: The Spirit Lake Nation requirement for consultation is digitally through our departmental website. Our website is https://linkprotect.cudasvc.com/url?a=http%3a%2f%2fcms.spiritlakeconsulting.com&c=E,1,LM8l7ruE8UJbhubiHTgkHvRc8y_n-1e_kL6JZMa7jrpxmlSxs5zwVITtemrDHd_my3IGojk2YD9mwgY5OgQhPHhzzIWpxZUusFTAo3v3wFzDmQ_ykxOT-Q,,&typo=1

We do not accept mailed paper or emailed digital submissions of project material. To speed up our response time and to be in compliance with our environmental practices we do not accept paper submissions. All proposed projects must be processed through our website. Multiple people in our department need access to the project files and department notes to be able to do their work on the project. For organization, documentation, and financial regulation, all Section 106 project compliance work is archived in our system.

Just as the majority of State Historic Preservation Offices elect to have companies submit their proposed project directly to their office in the format they require, as a sovereign nation, we have the right to ask for the same courtesy.

We require that you submit Form 620 or 621, complete with all of its attachments to our website.

It would expedite the process of getting your project into compliance if you would wait and submit your proposed project to our department when Form 620/621 and all of its attachments are ready - particularly the complete cultural resource report.We waste quite a bit of time contacting companies and searching for the Form 620/621 if the proposed project is submitted to us with only a dot on the map.

If you have any questions or need more information please contact FCC specialist Susie Fox at siouxz_05@hotmail.com and 701-766-4031, or THPO Erich Longie, PHD at thpo@gondtc.com and 701-766-4032.

2. Attorney Montana & Associates LLC - Crow Creek Sioux Tribe - N12923 N Prairie Rd Osseo, WI - CCSTFCCTCNS@outlook.com - 605-881-1227 (ext: 1) - electronic mail

3. TCNS Compliance Reviewer Alicia Cloud - Sisseton-Wahpeton Oyate of the Lake Traverse Reservation - (PO Box: 907) Sisseton, SD - SWO_TCNS@swo-nsn.gov; virginia.m.w.oboyle@gmail.com - 605-698-3584 - electronic mail
Exclusions: The Sisseton Wahpeton Oyate Nation requirement for consultation is digitally through our departmental website. Our website is https://linkprotect.cudasvc.com/url?a=http%3a%2f%2fsisseton.heritageconsultation.com&c=E,1,8Wka-6IWLivm6VUWmh8zSJmgFGzpcSIIGeKTDC2zkeKmRvBROmvtikXea_vDucWlIPwmsDG0SWzR5y8o36nGjchvF-vQ0fA1l_jrGI78T1Ldb6jm_0Y76QY,&typo=1

We do not accept mailed paper or emailed digital submissions of project material.Tospeed up our response time and to be in compliance with our environmental practices, we do not accept paper submissions. All proposed projects must be processed through our website. Multiple people in our department need access to the project files and department notes to be able to do their work on the project. For organization, documentation, and financial regulation, all Section 106 project compliance work is archived in our system.

Just as the majority of State Historic Preservation Offices electto have companies submit their proposed project directly to their office in the format they require, as a sovereign nation, we have the right to ask for the same courtesy.

We require that you submit Form 620 or 621, complete with all of its attachments to our website.

It would expedite the process of getting your project into compliance if you would wait and submit your proposed project to our department when Form 620/621 and all of its attachments are ready - particularly the complete cultural resource report. We waste quite a bit of time contacting companies and searching for the Form 620/621 if the proposed project is submitted to us with only a dot on the map.

If you have any questions or need more information please contact FCC specialist Alicia Cloud at SWO_TCNS@swo-nsn.gov and 605-698-8306, or THPO Dianne Desrosiers at dianned@swo-nsn.gov and 605-698-8225.

4. CPD/THPO Randy Teboe - Winnebago Tribe of Nebraska - P.O. Box 687 Winnebago, NE - randy.teboe@winnebagotribe.com - 402-878-3313 - electronic mail and regular mail

5. Tribal Historical Cultural Preservation Officer Thomas Wabnum - Prairie Band Potawatomi Nation - Government Center 16281 Q Road Mayetta, KS - thomaswabnum@pbpnation.org - 785-966-4016 - electronic mail and regular mail

If the applicant/tower builder receives no response from the Prairie Band Potawatomi Nation within 30 days after notification through TCNS, the Prairie Band Potawatomi Nation has no interest in participating in pre-construction review for the proposed site. The Applicant/tower builder, however, must immediately notify the Prairie Band Potawatomi Nation in the event archaeological properties or human remains are discovered during construction, consistent with Section IX of the Nationwide Programmatic Agreement and applicable law.

6. Tribal Historic Preservation Officer Elsie Whitehorn - Otoe-Missouria Tribe of Indians - 8151 Highway 177 Red Rock, OK - thpo@omtribe.org; ewhitehorn@omtribe.org - 580-723-4434 (ext: 202) - electronic mail
Exclusions: For submittal procedures, please contact:

Elsie Whitehorn
Tribal Historic Preservation Officer
580-723-4466 x 202
ewhitehorn@omtribe.org
thpo@omtribe.org

7. THPO Halona Cabe - Ponca Tribe of Indians of Oklahoma - 121 White Eagle Dr Ponca City, OK - halona.clawson@ponca.com; thpo@ponca.com - 580-763-0120 - electronic mail

8. THPO Tracy Wind - Citizen Potawatomi Nation - 1899 S. Gordon Cooper Drive Shawnee, OK - tcns@potawatomi.org; tracy.wind@potawatomi.org - 405-878-5830 - electronic mail
Exclusions: Email the following information to: tcns@potawatomi.org; tracy.wind@potawatomi.org

Contact information including contact person name, e-mail & phone number

SHPO 620/621 packet including SHPO response. We do not require a SHPO response for Collocations.

If excluded from SHPO review please follow FCC guidelines which state-at minimum, this alternative submission must include contact information for the applicant, a map of the proposed location of the facility, coordinates of the proposed facility, a description of the facility to be constructed including all proposed elements (such as, for example, access roads), and a description of the proposed site, including both aerial and site photographs.

Please remember to clearly indicate the TCNS number the FCC has supplied you to identify your project on ALL correspondence with CPN.

9. THPO Michael Blackwolf - Fort Belknap Indian Community - 656 Agency Main Street Harlem, MT - mblackwolf@ftbelknap.org; thpocompliance@ftbelknap.org - 406-353-2293 - electronic mail and regular mail

10. THPO Devin Oldman - Northern Arapaho - (PO Box: 67) St. Stephens, WY - pejutathpo@gmail.com; cbearing.nathpo@gmail.com - 307-856-1628 - electronic mail and regular mail
Exclusions: PLEASE SEND AN ARCHAEOLOGICAL SURVEY OR SITE INVENTORY/MAP FOR THE AREA WITHIN 1 MILE OF THE APE FOR PRE-CONSTRUCTION, COLLOCATION PROJECTS AND PTC POLES. The request gives the tribe an opportunity to comment on past projects that are now proposed as collocation projects.

The Northern Arapaho Tribe requests a legal description of the proposed site (township, range, section and topo map name).

The Northern Arapaho Tribe requests a chronology if sites are within the 1 mile radius of the APE.

The Northern Arapaho Tribe requests information of Native American tribes identified having traditional use within the 1 mile radius of the APE. Ethnographic reports for the Arapaho are requested.

The Northern Arapaho tribe may request a site visit for areas of significance to the tribe's history.

PLEASE ONLY SEND HARDCOPIES OF REPORTS BY MAIL. DO NOT EMAIL REPORTS.The Northern Arapaho Tribe, THPO' at P.O. Box 67, St. Stephens, WY 82524. ATTN: Devin Oldman. Please include the TCNS number on all correspondence.

ANY QUESTIONS CALL OR EMAIL:

DEVIN OLDMAN
3078561628
nathpodd@gmail.com

11. Historic Preservation Director Johnathan L Buffalo - Sac & Fox Tribe of the Mississippi in Iowa - 349 Meskwaki Road Tama, IA - sp.historical@meskwaki-nsn.gov - 641-484-3185 - electronic mail and regular mail

12. Environmental Director John Rodwan - Huron Potawatomi - 2221 1-1/2 Mile Rd Fulton, MI - jrodwan@nhbpi.com - 269-729-5151 - electronic mail

13. THPO Gary Loonsfoot Jr - Keweenaw Bay Indian Community - 16429 Beartown Road . Baraga, MI - gloonsfoot@kbic-nsn.gov - 906-

353-4278 - electronic mail and regular mail

14. Historic Preservation Director Jonnie J Sam II - Little River Band of Ottawa Indians - 2608 Government Center Drive Manistee, MI - jsam@lrboi-nsn.gov - 231-723-8288 - electronic mail

15. Tribal Historic Preservation Officer Matthew Bussler - Pokagon Band of Potawatomi Indians - 58620 Sink Road (PO Box: 180) Dowagiac, MI - Matthew.Bussler@pokagonband-nsn.gov - 269-783-9291 - electronic mail and regular mail

If the applicant/tower builder receives no response from the Pokagon Band of Potawatomi Indians within 30 days after notification through TCNS, the Pokagon Band of Potawatomi Indians has no interest in participating in pre-construction review for the proposed site. The Applicant/tower builder,
however, must immediately notify the Pokagon Band of Potawatomi Indians in the event archaeological properties or human remains are discovered during construction, consistent with Section IX of the Nationwide Programmatic Agreement and applicable law.

16. Tribal Archaeologist/THPO Kade M Ferris MS - Red Lake Band of Chippewa Indians of Minnesota - (PO Box: 274) Red Lake, MN - kade.ferris@redlakenation.org - 218-679-1691 - electronic mail

If the applicant/tower builder receives no response from the Red Lake Band of Chippewa Indians of Minnesota within 30 days after notification through TCNS, the Red Lake Band of Chippewa Indians of Minnesota has no interest in participating in pre-construction review for the proposed site. The Applicant/tower builder,
however, must immediately notify the Red Lake Band of Chippewa Indians of Minnesota in the event archaeological properties or human remains are discovered during construction, consistent with Section IX of the Nationwide Programmatic Agreement and applicable law.

17. THPO and NAGPRA Representative Daisy McGeshick Ms - Lac Vieux Desert Band of Lake Superior Chippewa Indians - E23857 Poplar Circle (PO Box: 249) Watersmeet, MI - daisy.mcgeshick@lvdtribal.com - 906-358-0137 - electronic mail

18. THPO Noah C White III - Prairie Island Indian Community - 5636 Sturgeon Lake Road Welch, MN - celltower@piic.org - 651-385-4175 - electronic mail

If the applicant/tower builder receives no response from the Prairie Island Indian Community within 30 days after notification through TCNS, the Prairie Island Indian Community has no interest in participating in pre-construction review for the proposed site. The Applicant/tower builder,
however, must immediately notify the Prairie Island Indian Community in the event archaeological properties or human remains are discovered during construction, consistent with Section IX of the Nationwide Programmatic Agreement and applicable law.

19. THPO Samantha Odegard - Upper Sioux Community of Minnesota - 5722 Travers Lane (PO Box: 147) Granite Falls, MN - THPO@uppersiouxcommunity-nsn.gov; THPO@uppersiouxcommunity-nsn.gov - 320-564-3853 (ext: 6334) - electronic mail

20. THPO Edith Leoso - Bad River Band of Lake Superior Tribe of Chippewa Indians - (PO Box: 39) Odanah, WI - thpo@badriver-nsn.gov; THPOAsst@badriver-nsn.gov - 715-682-7123 - electronic mail

If the applicant/tower builder receives no response from the Bad River Band of Lake Superior Tribe of Chippewa Indians within 30 days after notification through TCNS, the Bad River Band of Lake Superior Tribe of Chippewa Indians has no interest in participating in pre-construction review for the proposed site. The Applicant/tower builder,
however, must immediately notify the Bad River Band of Lake Superior Tribe of Chippewa Indians in the event archaeological properties or human remains are discovered during construction, consistent with Section IX of the Nationwide Programmatic Agreement and applicable law.

21. Tribal Historic Preservation Officer William Quackenbush - Ho-Chunk Nation - (PO Box: 667) Black River Falls, WI -

bill.quackenbush@ho-chunk.com - 715-284-7181 (ext: 1121) - electronic mail

22. THPO Marvin DeFoe - Red Cliff Band of Lake Superior Chippewa Indians of Wisconsin - 88455 Pike Road, HWY 13 Bayfield, WI - Marvin.DeFoe@redcliff-nsn.gov; Edwina.Buffalo-Reyes@redcliff-nsn.gov - 715-779-3700 (ext: 4242) - electronic mail

23. Tribal Historic Preservation Officer Adam J VanZile - Sokaogon Chippewa Community - 3051 Sand Lake Road Crandon, WI - thpo@scc-nsn.gov - 715-478-6448 - electronic mail and regular mail

If the applicant/tower builder receives no response from the Sokaogon Chippewa Community within 30 days after notification through TCNS, the Sokaogon Chippewa Community has no interest in participating in pre-construction review for the proposed site. The Applicant/tower builder, however, must immediately notify the Sokaogon Chippewa Community in the event archaeological properties or human remains are discovered during construction, consistent with Section IX of the Nationwide Programmatic Agreement and applicable law.

24. THPO Brett Barnes - Eastern Shawnee Tribe of Oklahoma - 70500 East 128 Road Wyandotte, OK - celltower@estoo.net - 918-666-2435 (ext: 1845) - regular mail
Exclusions: DO NOT EMAIL DOCUMENTATION; it will be deleted without being opened.
Submit one printed color copy by US postal mail or other parcel carrier of all documentation to:

Eastern Shawnee Tribe
Attn: Cell Tower Program
70500 E. 128 Rd.
Wyandotte, OK 74370

Provide a 1-page cover letter with the following information:
a. TCNS Number
b. Company Name
c. Project Name, City, County, State
d. Project type
e. Project coordinates
f. Contact information

The Eastern Shawnee Procedures document is available and highly recommended for guidance; send an email to celltower@estoo.net requesting our most current copy.

25. THPO Diane Hunter - Miami Tribe of Oklahoma - (PO Box: 1326) Miami, OK - swillard@miamination.com; dhunter@miamination.com - 918-541-1390 - electronic mail

26. EPA Cheryl Stafford - Ottawa Tribe of Oklahoma - (PO Box: 110) Miami, OK - cherylstafford@sbcglobal.net - 918-541-1902 - regular mail

27. THPO Sherri Clemons - Wyandotte Nation - 64700 E, Hwy 60 Wyandotte, OK - algonquinconsultants@gmail.com; algonquin@neok.com - 918-678-6344 - electronic mail and regular mail

28. THPO Kim Jumper - Shawnee Tribe - 29 South 69A Highway Miami, OK - kimjumper@shawnee-tribe.com - 918-542-2441 - regular mail

29. THPO Jonathan Windy Boy - Chippewa Cree Tribe of the Rocky Boy's Reservation - 9740 Upper Box Elder Road (PO Box: 230) Box Elder, MT - jonathan.windyboy@nei-yahw.com; falene.russette@nei-yahw.com - 406-395-4700 - electronic mail
Exclusions: The Chippewa Cree Tribe performs its reviews of FCC undertakings and projects through its arrangement with I Response; a Tribally-owned enterprise. Please send all of your Forms 620 and Forms 621 to I Response at https://linkprotect.cudasvc.com/url?a=http%3a%2f%2fapp.iresponse106.com%2f.&c=E,1,B30Mxem4T2w2NPpNnSXnadK-6AXsgcStvfZ-mZ27785VOF9_UaEoVmNkkJxjcZTJd0yWpD9MY0U7j1PBXbxP1SBIBbhhoApCE2YBJguLevW4iWvw8T2BOuvY&typo=1 The reviews will begin once all the required documentation has been received at https://linkprotect.cudasvc.com/url?a=http%3a%2f%2fapp.iresponse106.com%2f.&c=E,1,OHtTBVk-YHp377BxgkZZ4buwh_CvEwHqUEdorVfaRl5Yfihc33e9FNTgZmQYYpmlCbxcRtL5BnqEZylap6Hf3AobcUNr6ZxJpyLVE0H37cDQbzfpJkSwb-f6RoYl&typo=1 If the qualified and professional reviewers determine that additional information is required, or that field work is required, they will contact you through the I Response system and through TCNS. If the Tribe determines that the proposed project will have an effect on historic properties and/or Tribal religious and cultural sites or properties, we will provide notice to the project proponent and to the FCC.

30. THPO Melinda J Young - Lac du Flambeau Band of Lake Superior Chippewa Indians - Tribal Historic Preservation Office (PO Box: 67) Lac du Flambeau, WI - ldfthpo@ldftribe.com - 715-588-2139 - regular mail

31. THPO David Grignon - Menominee Indian Tribe of Wisconsin - (PO Box: 910) Keshena, WI - dgrignon@mitw.org - 715-799-5258 - electronic mail and regular mail

32. Acting THPO Jeff Desjarlais Jr - Turtle Mountain Band of Chippewa - 4180 HWY 281 West (PO Box: 900) Belcourt, ND - dayla.walter@tmbci.org; desjarlaisjr.jeffrey@yahoo.com - 701-477-2640 - electronic mail and regular mail

The notification that you provided was also forwarded to the following SHPOs in the State in which you propose to construct and neighboring States. The information was provided to these SHPOs as a courtesy for their information and planning. You need make no effort at this time to follow up with any SHPO that does not respond to this notification. Prior to construction, you must provide the SHPO of the State in which you propose to construct (or the Tribal Historic Preservation Officer, if the project will be located on certain Tribal lands), with a Submission Packet pursuant to Section VII.A of the NPA unless the project is excluded from SHPO review under Section III D or E of the NPA.

33. SHPO Robert E Carter Jr - Department of Natural Resources - 402 West Washington Street Indiana Govt. Center South, Room W256 Indianapolis, IN - dhpa@dnr.state.in.us - 317-232-1646 - electronic mail and regular mail

34. Deputy SHPO Jon C Smith - Department of Natural Resources - 402 West Washington Street Indiana Govt. Center South, Room W256 Indianapolis, IN - jsmith@dnr.state.in.us - 317-232-1646 - electronic mail

35. SHPO Brian D Conway - State Historic Preservation Office, Michigan Historical Center - (PO Box: 30740) Lansing, MI - conwaybd@state.mi.us - 517-373-1630 - electronic mail

36. Amanda Terrell - Ohio History Connection - 800 E. 17th Avenue Columbus, OH - aterrell@ohiohistory.org - 614-298-2000 - electronic mail and regular mail

TCNS automatically forwards all notifications to all Tribal Nations and SHPOs that have an expressed interest in the geographic area of a proposal. However, if a proposal for PTC wayside poles falls within a designated exclusion, you need not expect any response and need not pursue any additional process with that Tribal Nation or SHPO. In addition, a particular Tribal Nation or SHPO may also set forth policies or procedures within its details box that exclude from review certain facilities (for example, a statement that it does not review collocations with no ground disturbance; or that indicates that no response within 30 days indicates no interest in participating in pre-construction review).

Please be advised that the FCC cannot guarantee that the contact(s) listed above have opened and reviewed an electronic or regular mail notification. If you learn that any of the above contact information is no longer valid, please contact the FCC by emailing tcnshelp@fcc.gov. The following information relating to the proposed tower was forwarded to the person(s) listed above:

Notification Received: 12/04/2018
Notification ID: 180995
Excluded from SHPO Review: No
Tower Owner Individual or Entity Name: Pyramid Network Services
Consultant Name: Mindi L Okai
Street Address: 10845 Olive Blvd.
Suite 260
City: St. Louis
State: MISSOURI
Zip Code: 63141
Phone: 314-997-6111
Email: tribal@trileaf.com

Structure Type: LTOWER - Lattice Tower
Latitude: 43 deg 15 min 45.6 sec N
Longitude: 85 deg 48 min 27.7 sec W
Location Description: White Road
City: Bailey
State: MICHIGAN
County: MUSKEGON
Detailed Description of Project: Legal Description: S13 T10N R13W
Ground Elevation: 264.6 meters
Support Structure: 144.8 meters above ground level
Overall Structure: 148.7 meters above ground level
Overall Height AMSL: 413.3 meters above mean sea level

If you have any questions or comments regarding this notice, please contact the FCC using the electronic Help Request form located on the FCC's website at:

https://linkprotect.cudasvc.com/url?a=https%3a%2f%2fwww.fcc.gov%2fwireless%2favailable-support-services&c=E,1,Xt6bXIiB2ZoOWDLRo0DKldcwnYghVPrCt9td1BY7le-_WKcU3_nxCcjF3ejLq8pBBeOw6SDAHcuSbiLB18N9zCcBwJruRdaZhGUpevPFzGeC6dckrszAMKw,&typo=1

You may also call the FCC Support Center at (877) 480-3201 (TTY 717-338-2824). Hours are from 8:00 a.m. to 6:00 p.m. Eastern Time, Monday through Friday (except Federal holidays). To provide quality service and ensure security, all telephone calls are recorded.

Thank you,
Federal Communications Commission

Attachment 7. Historic Properties Direct Effects

a. List all properties within the APE for direct effects.

Based on a review of online database files conducted by Mr. Branstner, Archaeologist with Great Lakes Research, Inc., through the National Register Information System website (http://nrhp.focus.nps.gov/) and an on-site inspection of the Michigan State Housing Development Authority's architectural files in December 2018, there are no Historic Properties within the APE for Direct Effects. This effort was supplemented with a review of the State of Michigan's archaeological site file to determine whether any archaeological Historic Properties had been previously identified within the APE for Direct Effects; no such properties were noted.

b. Provide the name and address (including U.S. Postal Service ZIP Code) of each property in the APE for direct effects, not listed in part "a" (above), that the Applicant considers to be eligible for listing in the National Register as a result of the Applicant's research. For each such property, describe how it satisfies the criteria of eligibility (36 C.F.R. Part 63). For each property that was specifically considered and determined not to be eligible, describe why it does not satisfy the criteria of eligibility.

No archaeological sites, historic properties, or cultural resources were observed within the APE for Direct Effects. A finding of *No Historic Properties in the APE for Direct Effects* is recommended for this project.

Attachment 7. Continued

c. Describe the techniques and the methodology, including any field survey, used to identify Historic Properties within the APE for direct effects.[1] If no archeological field survey was performed, provide a report substantiating that: i) the depth of previous disturbance exceeds the proposed construction depth (excluding footings and other anchoring mechanisms) by at least 2 feet; or, ii) geomorphological evidence indicates that cultural resource-bearing soils do not occur within the project area or may occur but at depths that exceed 2 feet below the proposed construction depth.[2]

As noted above, based on a review of online database files conducted by Mr. Branstner, Archaeologist with Great Lakes Research, Inc., through the National Register Information System website (http://nrhp.focus.nps.gov/) and an on-site inspection of the Michigan State Housing Development Authority's architectural files in December 2018, there are no Historic Properties within the APE for Direct Effects. This effort was supplemented with a review of the State of Michigan's archaeological site file to determine whether any archaeological Historic Properties had been previously identified within the APE for Direct Effects; no such properties were noted.

Great Lakes Research, Inc. also completed an on-site evaluation of the proposed project site for the likelihood of containing previously undocumented archeological or architectural Historic Properties on 12 December 2018. Please refer to the attached report documenting the findings of this project review by a qualified archaeologist, including a description of the techniques and the methodology used to identify Historic Properties within the APE for Direct Effects. This report concludes that no archaeological or architectural properties are included within the APE for Direct Effects.

[1] Pursuant to Section VI.D.2.a. of the Nationwide Agreement, Applicants shall make a reasonable and good faith effort to identify above ground and archeological Historic Properties, including buildings, structures, and historic districts, that lie within the APE for direct effects. Such reasonable and good faith efforts may include a field survey where appropriate.

[2] Under Section VI.D.2.d. of the Nationwide Agreement, an archeological field survey is required even if none of these conditions applies, if an Indian tribe or NHO provides evidence that supports a high probability of the presence of intact archeological Historic Properties within the APE for direct effects.

Attachment 8. Historic Properties Visual Effects

Historic Properties Identified for Visual Effects Guidelines

a. **Provide the name and address (including U.S. Postal Service ZIP Code) of each property in the APE for visual effects that is listed in the National Register, has been formally determined eligible for listing by the Keeper of the National Register, or is identified as considered eligible for listing in the records of the SHPO/THPO, pursuant to Section VI.D.I.a. of the Nationwide Agreement.**

   Based on a review of on-line database files through the National Register Information System website (http://nrhp.focus.nps.gov/) and a review of the Michigan State Housing Development Authority's property files, no NRHP-listed or 'determined eligible' properties have been previously identified within the 1.5-mile radius Visual APE.

b. **Provide the name and address (including U.S. Postal Service ZIP Code) of each Historic Property in the APE for visual effects, not listed in part "a", identified through the comments of Indian Tribes, NHOs, local governments, or members of the public. Identify each individual or group whose comments led to the inclusion of a Historic Property in this attachment. For each such property, describe how it satisfies the criteria of eligibility (36 C.F.R. Part 63)**.

   As of the date of this report, Trileaf Corporation has not received comments from Indian Tribes, NHOs, local governments, or members of the public that identify Historic Properties in the APE for visual effects.

c. **For any properties listed in the above Historic Properties list, that the Applicant considers no longer eligible for inclusion in the National Register, explain the basis for this recommendation.**

   N/A

Attachment 9. Local Government

a. **If any local government has been contacted and invited to become a consulting party pursuant to Section V.A. of the Nationwide Programmatic Agreement, list the local government agencies contacted. Provide a summary of contacts and copies of any relevant documents (e.g., correspondence or notices).**

On December 7, 2018, Ms. Ruth Ann Bull of Casnovia Township was notified of the proposed project and has been invited to comment on the proposed project's potential effect on Historic Properties as well as indicate whether they are interested in consulting further on the proposed project. A copy of Trileaf Corporation's correspondence with Ms. Ruth Ann Bull of Casnovia Township is attached.

b. **If a local government agency will be contacted but has not been to date, explain why and when such contact will take place.**

N/A

Lauren Sereno

From: Lauren Sereno
Sent: Friday, December 07, 2018 2:07 PM
To: 'office@castwp.com'
Subject: CLG - White Rd, Bailey, MI 49303 - (Trileaf Project# 646371)
Attachments: CLG - Moore Park.docx

December 7, 2018

Casnovia Township
Attn: Ms. Ruth Ann Bull, Office Administrator
245 Canada Road
Casnovia, MI 49318
(616) 675-5611
office@castwp.com

RE: **Pyramid Network Services – Moore Park – Trileaf Project #646371**
White Road, Bailey, Michigan 49303
Muskegon County, Grant Quadrangle (USGS)
Latitude: 43° 15' 45.6" N, Longitude: 85° 48' 27.7" W

Dear Ms. Bull:

Trileaf Corporation is in the process of completing a NEPA Review at the referenced property. Our client proposes to construct a 475-foot-tall (488-feet-overall) self-support telecommunications tower and associated equipment within a proposed 80-foot by 80-foot (6,400-square-foot) lease area. An approximately 12-foot-wide access easement is proposed to extend north from the north side of the proposed telecommunications compound into a proposed service vehicle turn-around, and then east approximately 83.4 feet to an existing access drive. The antenna will be licensed by the Federal Communications Commission (FCC).

Our investigation includes determining if the site is contained in, on or within the viewshed of a building, site, district, structure or object, significant in American history, architecture, archaeology, engineering or culture, that is listed, or eligible for listing on the State or National Registers of Historic Places, or located in or on an Indian Religious Site.

Trileaf is requesting information regarding this tower's potential effect on Historic Properties. All information received will be forwarded to the State Historic Preservation Office (SHPO) as part of the Section 106 review process. *Additionally, this invitation to comment is separate from any local planning/zoning process that may apply to this project*.

If you wish to comment or be considered a consulting party, please respond within thirty (30) days of the date of this letter. If a response is not received within thirty (30) days, it will be assumed that you have no objections to this undertaking. A site topography map and aerial photograph are enclosed for your reference.

Please call me at (630) 227-0202 or email l.sereno@trileaf.com if you need additional information or have any questions. Thank you for your assistance in this regard.

Sincerely,

Lauren Sereno
Project Scientist

TRILEAF
ENVIRONMENTAL • ARCHITECTURE • ENGINEERING

1821 Walden Office Square, Suite 510
Schaumburg, IL 60173
(630) 227-0202 Office
(630) 227-1212 Fax

Attachment 10. Other Consulting Parties and Public Notice

List additional consulting parties that were invited to participate by the Applicant, or independently requested to participate. Provide any relevant correspondence or other documents.

On December 7, 2018, Mr. Mark Fairchild of the Muskegon County Historical Society was invited to comment on the proposed project's potential effect on Historic Properties as well as indicate whether they are interested in consulting further on the proposed project. A copy of Trileaf Corporation's correspondence with Mr. Mark Fairchild of the Muskegon County Historical Society is attached.

You are required to provide a Public Notice Attachment.

Attached, please find a copy of a legal notice regarding the proposed telecommunications tower construction that was posted in *the Muskegon Chronicle* on December 16, 2018. As of the date of this submission packet, no comments regarding this notice have been received by Trileaf Corporation. Should a response be received, copies will be forwarded to all consulting parties as an addendum to this submission packet.

Lauren Sereno

From: Lauren Sereno
Sent: Friday, December 07, 2018 2:01 PM
To: 'fairchildma@co.muskegon.mi.us'
Subject: ITC - White Road, Bailey, MI 49303 - (Trileaf Project# 646371)
Attachments: ITC Letter - Moore Park.docx

December 7, 2018

Muskegon County Historical Society
Attn: Mr. Mark Fairchild
173 East Apple Avenue
Muskegon, MI 49442
(231) 724-6271
fairchildma@co.muskegon.mi.us

RE: **Pyramid Network Services – Moore Park – Trileaf Project #646371**
White Road, Bailey, Michigan 49303
Muskegon County, Grant Quadrangle (USGS)
Latitude: 43° 15' 45.6" N, Longitude: 85° 48' 27.7" W

Dear Mr. Fairchild:

Trileaf Corporation is in the process of completing a NEPA Review at the referenced property. Our client proposes to construct a 475-foot-tall (488-feet-overall) self-support telecommunications tower and associated equipment within a proposed 80-foot by 80-foot (6,400-square-foot) lease area. An approximately 12-foot-wide access easement is proposed to extend north from the north side of the proposed telecommunications compound into a proposed service vehicle turn-around, and then east approximately 83.4 feet to an existing access drive. The antenna will be licensed by the Federal Communications Commission (FCC).

Our investigation includes determining if the site is contained in, on or within the viewshed of a building, site, district, structure or object, significant in American history, architecture, archaeology, engineering or culture, that is listed, or eligible for listing on the State or National Registers of Historic Places, or located in or on an Indian Religious Site.

Trileaf is requesting information regarding this tower's potential effect on Historic Properties. All information received will be forwarded to the State Historic Preservation Office (SHPO) as part of the Section 106 review process. *Additionally, this invitation to comment is separate from any local planning/zoning process that may apply to this project*.

If you wish to comment or be considered a consulting party, please respond within thirty (30) days of the date of this letter. If a response is not received within thirty (30) days, it will be assumed that you have no objections to this undertaking. A site topography map and aerial photograph are enclosed for your reference.

Please call me at (630) 227-0202 or email l.sereno@trileaf.com if you need additional information or have any questions. Thank you for your assistance in this regard.

Sincerely,

Lauren Sereno
Project Scientist

TRILEAF
ENVIRONMENTAL • ARCHITECTURE • ENGINEERING

1821 Walden Office Square, Suite 510
Schaumburg, IL 60173
(630) 227-0202 Office
(630) 227-1212 Fax

STATE OF MICHIGAN)
County of Muskegon ss Dawn Suttorp

Being duly sworn deposes and say he/she is Principal Clerk of

THE MUSKEGON CHRONICLE
DAILY EDITION

a newspaper published and circulated in the County of Muskegon and otherwise qualified according to Supreme Court Rule; and that the annexed notice, taken from said paper, has been duly published in said paper on the following day(days)

December 16 A.D. 20 18

Sworn to and subscribed before me this 17th day of December 2018

Janice M. DeGraaf
JANICE M. DEGRAAF
NOTARY PUBLIC, STATE OF MI
COUNTY OF KENT
MY COMMISSION EXPIRES Oct 3, 2020
ACTING IN COUNTY OF Kent

Pyramid Network Services proposes to build a 488-foot Self-Support Communications Tower at the approx. vicinity of White Road, Bailey, Muskegon County, MI, 49303. Lat.: 43-15-45.6. Long.: -85-48-27.7. Public comments regarding potential effects from this site on historic properties may be submitted within 30 days from the date of this publication to: Trileaf Corp, Lauren, l.sereno@trileaf.com, 1821 Walden Office Square, Suite 510, Schaumburg, IL 60173, 630-227-0202.

Attachment 11. SHPO Specific Forms

As requested, the *Application for Section 106 Review Form* is attached.

STATE HISTORIC PRESERVATION OFFICE
Application for Section 106 Review

SHPO Use Only							
☐ IN	Received Date	____ / ____ / ____		Log In Date	___ / ___ / ___		
☐ OUT	Response Date	____ / ____ / ____		Log Out Date	___ / ___ / ___		
	Sent Date	____ / ____ / ____					

Submit one copy for each project for which review is requested. This application is required. Please type. Applications must be complete for review to begin. Incomplete applications will be sent back to the applicant without comment. Send only the information and attachments requested on this application. Materials submitted for review cannot be returned. Due to limited resources we are unable to accept this application electronically.

I. GENERAL INFORMATION

☒ THIS IS A NEW SUBMITTAL ☐ THIS IS MORE INFORMATION RELATING TO ER#

a. Project Name: Moore Park
b. Project Address (if available): White Road, Bailey, MI 49303
c. Municipal Unit: Casnovia Township County: Muskegon
d. Federal Agency, Contact Name and Mailing Address: Mr. Stephen Delsordo, FCC Wireless Telecomm Bureau, 445 12th Street SW, Washington, DC 20554
e. State Agency, Contact Name and Mailing Address: MI SHPO, Mr. Brian Grennell
f. Consultant or Applicant Contact Information, *including mailing address*: Ms. Lauren Sereno, Trileaf Environmental and Property Consultants, 1821 Walden Office Square, Suite 510, Schaumburg, IL 60173 (Phone 630-227-0202 / Fax 630-227-1212)

II. GROUND DISTURBING ACTIVITY (INCLUDING EXCAVATION, GRADING, TREE REMOVALS, UTILITY INSTALLATION, ETC.)

DOES THIS PROJECT INVOLVE GROUND-DISTURBING ACTIVITY? ☒ YES ☐ NO (If no, proceed to section III.)

Exact project location must be submitted on a USGS Quad map (portions, photocopies of portions, and electronic USGS maps are acceptable as long as the location is clearly marked).

a. USGS Quad Map Name: Grant, MI
b. Township: 10N Range: 13W Section: 13
c. Description of width, length and depth of proposed ground disturbing activity: new 475-ft (144.8-m) self-support cell tower (488-ft [148.7-m] with appurtenances) on an 80 x 80-ft (24.4 x 24.4-m) cell tower lease area. Access to the site will be provided an approximately 12-ft (3.7-m) wide access/utility easement that is proposed to extend north ~40 ft (12.2 m) from the north side of the proposed telecommunications compound into a proposed service vehicle turn-around, and then east ~80 ft (24.4-m) to an existing paved access drive.
d. Previous land use and disturbances: Forested, Agricultural(?)
e. Current land use and conditions: Forested county park
f. Does the landowner know of any archaeological resources found on the property? ☐ YES ☒ NO
   Please describe: N/A

III. PROJECT WORK DESCRIPTION AND AREA OF POTENTIAL EFFECTS (APE)
Note: Every project has an APE.

a. Provide a detailed written description of the project (plans, specifications, Environmental Impact Statements (EIS), Environmental Assessments (EA), etc. **cannot** be substituted for the written description):

The project consists of the construction of a new 475-ft (144.8-m) self-support cell tower (488-ft [148.7-m] with appurtenances) on an 80 x 80-ft (24.4 x 24.4-m) cell tower lease area. Access to the site will be provided an approximately 12-ft (3.7-m) wide access/utility easement that is proposed to extend north ~40 ft (12.2 m) from the north side of the proposed telecommunications compound into a proposed service vehicle turn-around, and then east ~80 ft (24.4-m) to an existing paved access drive. Total acreage of the existing and proposed cell tower site is approximately 0.18-acre (0.07-hectare).

b. Provide a localized map indicating the location of the project; road names must be included and legible.

See attached.

c. On the above-mentioned map, identify the APE.

See attached.

d. Provide a written description of the APE (physical, visual, auditory, and sociocultural), the steps taken to identify the APE, and the justification for the boundaries chosen:

Due to the height of the proposed tower (488-ft), the presumed APE for Visual Effects for this project is a 1.5-mile radius from the tower site per the FCC programmatic agreement.

IV. IDENTIFICATION OF HISTORIC PROPERTIES

a. List and date **all** properties 50 years of age or older located in the APE. If the property is located within a National Register eligible, listed or local district it is only necessary to identify the district:

None in Direct APE, and no NRHP or State of Michigan-listed properties in 1.5-mile radius Visual APE.

b. Describe the steps taken to identify whether or not any **historic** properties exist in the APE and include the level of effort made to carry out such steps:

Review of NRHP listings for Muskegon County, review of MI SHPO Historic Sites Inventory, field survey of direct effects (subject property), and field survey of visual effects APE.

c. Based on the information contained in "b", please choose one:

☐ Historic Properties Present in the APE
☒ No Historic Properties Present in the APE

d. Describe the condition, previous disturbance to, and history of any historic properties located in the APE:

N/A

V. PHOTOGRAPHS

Note: All photographs must be keyed to a localized map.

a. Provide photographs of the site itself.

See attached.

b. Provide photographs of all properties 50 years of age or older located in the APE (faxed or photocopied photographs are not acceptable).

N/A

VI. DETERMINATION OF EFFECT

☒ No historic properties affected based on [36 CFR § 800.4(d)(1)], please provide the basis for this determination.

☐ No Adverse Effect [36 CFR § 800.5(b)] on historic properties, explain why the criteria of adverse effect, 36 CFR Part 800.5(a)(1), were found not applicable.

☐ Adverse Effect [36 CFR § 800.5(d)(2)] on historic properties, explain why the criteria of adverse effect, [36 CFR Part 800.5(a)(1)], were found applicable.

Please print and mail completed form and required information to:

State Historic Preservation Office, Environmental Review Office, Michigan Historical Center, 702 W. Kalamazoo Street, P.O. Box 30740, Lansing, MI 48909-8240

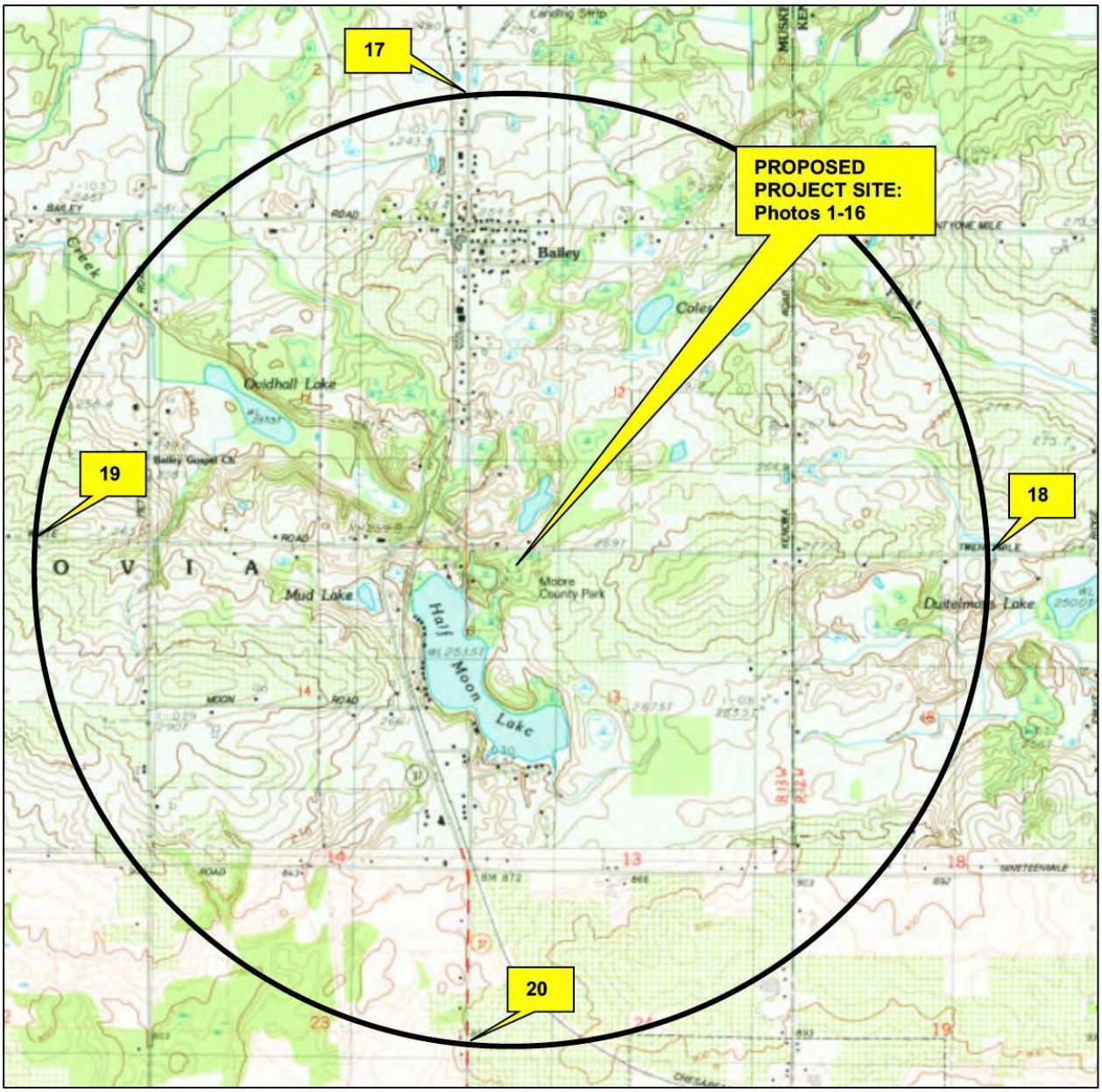

Topographic map with proposed project site location, 1.5-mile radius Visual APE, and photo key (*Grant, MI* 7.5-min quadrangle map [USGS 1985]).

	1. View to east towards gated entry to existing/proposed access easement. Note that entire access road is asphalt-paved.
	2. View to east from gated entry along existing/proposed access easement.

	3. View further to east along existing/proposed access easement.
	4. View to northeast along existing/proposed easement.

	5. View to NNE along existing/proposed access easement towards proposed project site; note how access road splits in distance.
	6. Staked centerpoint of cell tower lease area.

	7. View to southwest across proposed project site.
	8. View to northwest across proposed project site.

	9. View to northeast across proposed project site.
	10. View to southeast across proposed project site.

	11. View to north from center of proposed project site.
	12. View to east from center of proposed project site.

	13. View to south from center of proposed project site.
	14. View to west from center of proposed project site.

	15. Typical 40-cm diameter shovel test unit at center of cell tower lease area (STU 3).
	16. Modern brick debris near northeast corner of cell tower lease area, with Portland cement adhering.

	17. View to south along M-37 towards proposed project site from point near north limit of 1.5-mile radius Visual APE.
	18. View to west along White Rd./20 Mile Rd. towards proposed project site from east limit of 1.5-mile radius Visual APE.

	19. View to east along White Rd. towards proposed project site from west limit of 1.5-mile radius Visual APE.
	20. View to north along M-37 towards proposed project site from south limit of 1.5-mile radius Visual APE.

GRETCHEN WHITMER
GOVERNOR

STATE OF MICHIGAN
MICHIGAN STATE HOUSING DEVELOPMENT AUTHORITY
STATE HISTORIC PRESERVATION OFFICE

EARL J. POLESKI
EXECUTIVE DIRECTOR

February 8, 2019

JILL SPRINGER
ACTING FEDERAL PRESERVATION OFFICER
FCC WIRELESS TELECOMM BUREAU
445 12TH STREET SW
WASHINGTON DC 20554

RE: ER02-261.19.646371 Trileaf Cellular Communications Tower Site Review #646371, White Road, Sec. 13, T10N, R13W, Casnovia Township, Muskegon County (FCC)

Dear Ms. Springer:

Under the authority of Section 106 of the National Historic Preservation Act of 1966, as amended, we have reviewed the above-cited undertaking at the location noted above. Based on the information provided for our review, it is the opinion of the State Historic Preservation Officer (SHPO) that no historic properties are affected within the area of potential effects of this undertaking.

This letter evidences The FCC's compliance with 36 CFR § 800.4 "Identification of historic properties," and the fulfillment of The FCC's responsibility to notify the SHPO, as a consulting party in the Section 106 process, under 36 CFR § 800.4(d)(1) "No historic properties affected." **If the scope of work changes in any way, or if artifacts or bones are discovered, please notify this office immediately.**

We remind you that federal agency officials or their delegated authorities are required to involve the public in a manner that reflects the nature and complexity of the undertaking and its effects on historic properties per 36 CFR § 800.2(d). The National Historic Preservation Act also requires that federal agencies consult with any Indian tribe and/or Tribal Historic Preservation Officer (THPO) that attach religious and cultural significance to historic properties that may be affected by the agency's undertakings per 36 CFR § 800.2(c)(2)(ii).

The State Historic Preservation Office is not the office of record for this undertaking. You are therefore asked to maintain a copy of this letter with your environmental review record for this undertaking.

If you have any questions, please contact Brian Grennell, Cultural Resource Management Specialist, at 517-335-2721 or by email at GrennellB@michigan.gov. **Please reference our project number in all communication with this office regarding this undertaking.** Thank you for this opportunity to review and comment, and for your cooperation.

Sincerely,

Brian G. Grennell
Cultural Resource Management Specialist

for Brian D. Conway
State Historic Preservation Officer

BGG:SAT:lrp

Copy: Ms. Lauren Sereno, Trileaf Consultants

Lauren Sereno

From: towernotifyinfo@fcc.gov
Sent: Thursday, December 20, 2018 2:15 PM
To: Lauren Sereno
Subject: Section 106 New Filing Submitted- Email ID #3390246

The following new Section 106 filing has been submitted:

File Number: 0008476458
TCNS Number: 180995
Purpose: New Tower Submission Packet

Notification Date: 7AM EST 12/21/2018

Applicant: Pyramid Network Services
Consultant: Great Lakes Research, LLC, on behalf of Trileaf Corp
Positive Train Control Filing Subject to Expedited Treatment Under Program Comment: No
Site Name: Moore Park
Site Address: White Road
Detailed Description of Project: Legal Description: S13 T10N R13W
Site Coordinates: 43-15-45.6 N, 85-48-27.7 W
City: Bailey
County: MUSKEGON
State:MI
Lead SHPO/THPO: Michigan Historical Center

Consultant Contact Information:
Name: Great Lakes Research, LLC, on behalf of Trileaf Corp
Title:
PO Box:
Address: 1116 Dodge Street
City: Lake Geneva
State: WI
Zip: 53147
Phone: 630-227-0202
Fax:
Email: l.sereno@trileaf.com

NOTICE OF FRAUDULENT USE OF SYSTEM, ABUSE OF PASSWORD AND RELATED MISUSE
Use of the Section 106 system is intended to facilitate consultation under Section 106 of the National Historic Preservation Act and may contain information that is confidential, privileged or otherwise protected from disclosure under applicable laws. Any person having access to Section 106 information shall use it only for its intended purpose. Appropriate action will be taken with respect to any misuse of the system.

Appendix F

Native American Correspondence

Tribal Summary Table

Site: Moore Park	Site ID:
TCNS Number: 180995	TCNS Initial Notification Date: December 7, 2018

Tribe	TCNS auto-reply	Follow Up Request from Tribe		Follow Up(s) to Tribe		Final Reply		FCC Referral	Standing Agreements & Comments	GFP Utilized?
		Date	Requested Information	Date	Sent	Date	Comments			
Bad River Band of Lake Superior Tribe of Chippewa Indians	30 days no interest Notify of inadvertent discovery			12/21/2018	Sent Letter & Form 620/621	1/20/2019	Cleared per NOO			No
Chippewa Cree Tribe of the Rocky Boy's Reservation				12/21/2018	Sent Letter & Form 620/621	1/25/2019	To properly complete the Section 106 process, we request that you comply with the rules and instructions of the Advisory Council on Historic Preservation (ACHP) to arrange for the Tribe's professional staff to visit and to investigate the proposed project and that the project proponent cover the standard costs to document the site as part of a reconnaissance survey. Requests inadvertent discovery notification.			No
Citizen Potawatomi Nation				12/21/2018	Sent Letter & Form 620/621	2/4/2019	Will not impact any known sites. Requests inadvertent discovery notification.			No
Crow Creek Sioux Tribal Council		12/7/2018	Interested to consult	12/21/2018	Sent Letter & Form 620/621	12/27/2018	We have no issues with any historic properties within the APE that we have affiliation to. Please contact us in the event the ground disturbance inadvertently uncovers human remains and or archaeological/cultural material. Should any changes in the project be made please notify this office of the changes before further project planning continues.			No
Eastern Shawnee Tribe of Oklahoma		12/13/2018	Interested to consult	12/21/2018	Sent Letter & Form 620/621	1/15/2019	Based on the information provided and a review of our records, we find that No Historic Properties of sacred and/or cultural significance to the Tribe will be impacted by this project. Requests inadvertent discovery notification.			No
Fort Belknap Indian Community				12/21/2018	Sent Letter & Form 620/621	3/15/2019	Cleared by Referral	2/28/2019		No
Ho-Chunk Nation				12/21/2018	Sent Letter & Form 620/621	3/15/2019	Cleared by Referral	2/28/2019		No
Huron Potawatomi				12/21/2018	Sent Letter & Form 620/621	3/15/2019	Cleared by Referral	2/28/2019		No
Keweenaw Bay Indian Community				12/21/2018	Sent Letter & Form 620/621	3/15/2019	Cleared by Referral	2/28/2019		No

Tribal Summary Table

Site: Moore Park	Site ID:
TCNS Number: 180995	TCNS Initial Notification Date: December 7, 2018

Tribe	TCNS auto-reply	Follow Up Request from Tribe		Follow Up(s) to Tribe		Final Reply		FCC Referral	Standing Agreements & Comments	GFP Utilized?
		Date	Requested Information	Date	Sent	Date	Comments			
Lac du Flambeau Band of Lake Superior Chippewa Indians		12/26/2018	Interested to consult	12/21/2018	Sent Letter & Form 620/621	1/9/2019	Based on the information provided for our review, it is the opinion of the Lac du Flambeau THPO that the project has No Effect to sites of historic significance and/or the direct APE. Requests inadvertent discovery notification.			No
Lac Vieux Desert Band of Lake Superior Chippewa Indians		12/10/2018	Interested to consult	12/21/2018	Sent Letter & Form 620/621	3/22/2019	Cleared by Referral	3/7/2019		No
Little River Band of Ottawa Indians						12/5/2018	Project will not affect any religious, cultural or historic sites. Requests inadvertent discovery notification.			No
Menominee Indian Tribe of Wisconsin				12/21/2018	Sent Letter & Form 620/621	3/15/2019	Cleared by Referral	2/28/2019		No
Miami Tribe of Oklahoma		12/5/2018	Interested to consult	12/21/2018	Sent Letter & Form 620/621	1/16/2019	The Miami Tribe of Oklahoma is satisfied with efforts conducted to be sure that no Miami historic properties or other Miami cultural resources will likely be adversely affected by construction and use of this tower. Requests inadvertent discovery notification.			No
Northern Arapaho Tribe		12/12/2018	Interested to consult	12/21/2018	Sent Letter & Form 620/621	1/14/2019	No Historic Properties in the Direct or Visual APE. Requests inadvertent discovery notification.			No
Otoe-Missouria Tribe of Indians				12/21/2018	Sent Letter & Form 620/621	3/15/2019	Cleared by Referral	2/28/2019		No
Ottawa Tribe of Oklahoma				12/21/2018	Sent Letter & Form 620/621	3/15/2019	Cleared by Referral	2/28/2019		No
Pokagon Band of Potawatomi Indians	30 days no interest Notify of inadvertent discovery			12/21/2018	Sent Letter & Form 620/621	1/20/2019	Cleared per NOO			No
Ponca Tribe of Indians of Oklahoma				12/21/2018	Sent Letter & Form 620/621	2/14/2019	Construction of this proposed project will not adversely affect any sacred sites, traditional cultural properties or any other historic property of interest to the Ponca Tribe. Requests inadvertent discovery notification.			No
Prairie Band Potawatomi Nation	30 days no interest Notify of inadvertent discovery			12/21/2018	Sent Letter & Form 620/621	1/20/2019	Cleared per NOO			No

Tribal Summary Table	
Site: Moore Park	Site ID:
TCNS Number: 180995	TCNS Initial Notification Date: December 7, 2018

Tribe	TCNS auto-reply	Follow Up Request from Tribe		Follow Up(s) to Tribe		Final Reply		FCC Referral	Standing Agreements & Comments	GFP Utilized?
		Date	Requested Information	Date	Sent	Date	Comments			
Prairie Island Indian Community		12/12/2018	Interested to consult	12/21/2018	Sent Letter & Form 620/621	12/27/2018	The Prairie Island Indian Community has no issues regarding this proposed project. Requests inadvertent discovery notification.			No
Red Cliff Band of Lake Superior Chippewa Indians of Wisconsin				12/21/2018	Sent Letter & Form 620/621	3/15/2019	Cleared by Referral	2/28/2019		No
Red Lake Band of Chippewa Indians of Minnesota		12/10/2018	Interested to consult	12/21/2018	Sent Letter & Form 620/621	3/22/2019	Cleared by Referral	3/7/2019		No
Sac & Fox Tribe of the Mississippi in Iowa						12/5/2018	No interest in site. Requests inadvertent discovery notification.			No
Shawnee Tribe				12/21/2018	Sent Letter & Form 620/621	3/5/2019	The Shawnee Tribe is not currently aware of any specific Shawnee cultural or historic sites in this project area. We therefore offer no objection to the proposed construction. If plans are considered to expand or modify this tower and cause additional ground disturbance in the future, please let us know. Requests inadvertent discovery notification.	2/28/2019		No
Sisseton-Wahpeton Oyate of the Lake Traverse Reservation		12/5/2018	Interested to consult	12/21/2018	Sent Letter & Form 620/621	2/28/2019	With great regret, we submit this formal notice of no interest. Requests inadvertent discovery notification.	3/7/2019		No
Sokaogon Chippewa Community	30 days no interest Notify of inadvertent discovery			12/21/2018	Sent Letter & Form 620/621	1/20/2019	Cleared per NOO			No
Spirit Lake Nation		12/5/2018	Interested to consult	12/21/2018	Sent Letter & Form 620/621	1/16/2019	FINDING OF NO PROPERTIES - No cultural resources should be adversely affected by your proposed undertaking. Requests inadvertent discovery notification.			No

Tribal Summary Table	
Site: Moore Park	Site ID:
TCNS Number: 180995	TCNS Initial Notification Date: December 7, 2018

Tribe	TCNS auto-reply	Follow Up Request from Tribe		Follow Up(s) to Tribe		Final Reply		FCC Referral	Standing Agreements & Comments	GFP Utilized?
		Date	Requested Information	Date	Sent	Date	Comments			
Turtle Mountain Band of Chippewa		12/7/2018	Interested to consult	12/21/2018	Sent Letter & Form 620/621	1/9/2019	Based on our review of your information, archaeological report, and additional research of the property against our records, we have made a finding that No Historic Properties of importance to the Turtle Mountain Band of Chippewa Indians will be affected. Requests inadvertent discovery notification.			No
Upper Sioux Community of Minnesota				12/21/2018	Sent Letter & Form 620/621	12/21/2018	No interest in site. Requests inadvertent discovery notification.			No
Winnebago Tribe of Nebraska				12/21/2018	Sent Letter & Form 620/621	3/15/2019	Cleared by Referral	2/28/2019		No
Wyandotte Nation				12/21/2018	Sent Letter & Form 620/621	3/15/2019	Cleared by Referral	2/28/2019		No

From: towernotifyinfo@fcc.gov
To: tribal
Cc: tcnsweekly@fcc.gov
Subject: NOTICE OF ORGANIZATION(S) WHICH WERE SENT PROPOSED TOWER CONSTRUCTION NOTIFICATION INFORMATION - Email ID #6120782
Date: Friday, December 7, 2018 2:03:06 AM

Dear Applicant:

Thank you for using the Federal Communications Commission's (FCC) Tower Construction Notification System (TCNS). The purpose of this electronic mail message is to inform you that the following authorized persons were sent the notification that you provided through TCNS, which relates to your proposed antenna structure. The information was forwarded by the FCC to authorized TCNS users by electronic mail and/or regular mail (letter). We note that the review period for all parties begins upon receipt of the Submission Packet pursuant to Section VII.A of the NPA and notifications that do not provide this serve as information only.

Persons who have received the notification that you provided include leaders or their designees of federally-recognized American Indian Tribes, including Alaska Native Villages (collectively "Tribal Nations"), Native Hawaiian Organizations (NHOs), and State Historic Preservation Officers (SHPOs). For your convenience in identifying the referenced Tribal Nations and NHOs and in making further contacts, the City and State of the Seat of Government for each Tribal Nation and NHO, as well as the designated contact person, is included in the listing below. We note that Tribal Nations may have Section 106 cultural interests in ancestral homelands or other locations that are far removed from their current Seat of Government. Pursuant to the Commission's rules as set forth in the Nationwide Programmatic Agreement for Review of Effects on Historic Properties for Certain Undertakings Approved by the Federal Communications Commission (NPA), all Tribal Nations and NHOs listed below must be afforded a reasonable opportunity to respond to this notification, consistent with the procedures set forth below, unless the proposed construction falls within an exclusion designated by the Tribal Nation or NHO. (NPA, Section IV.F.4).

The notification that you provided was forwarded to the following Tribal Nations and NHOs. A Tribal Nation or NHO may not respond until a full Submission Packet is provided. If, upon receipt, the Tribal Nation or NHO does not respond within a reasonable time, you should make a reasonable effort at follow-up contact, unless the Tribal Nation or NHO has agreed to different procedures (NPA, Section IV.F.5). In the event a Tribal Nation or NHO does not respond to a follow-up inquiry, or if a substantive or procedural disagreement arises between you and a Tribal Nation or NHO, you must seek guidance from the Commission (NPA, Section IV.G). These procedures are further set forth in the FCC's Second Report and Order released on March 30, 2018 (FCC 18-30).

1. FCC Compliance Officer Susie Fox - Spirit Lake Nation - (PO Box: 359) Fort Totten, ND - siouxz_05@hotmail.com; virginia.m.w.oboyle@gmail.com - 701-766-4031 - electronic mail
Exclusions: The Spirit Lake Nation requirement for consultation is digitally through our departmental website. Our website is https://linkprotect.cudasvc.com/url?a=http%3a%2f%2fcms.spiritlakeconsulting.com&c=E,1,LM8l7ruE8UJbhubiHTgkHvRc8y_n-1e_kL6JZMa7jrpxmlSxs5zwVITtemrDHd_my3IGojk2YD9mwgY5OgQhPHhzzIWpxZUusFTAo3v3wFzDmQ_ykxOT-Q,,&typo=1

We do not accept mailed paper or emailed digital submissions of project material. To speed up our response time and to be in compliance with our environmental practices we do not accept paper submissions. All proposed projects must be processed through our website. Multiple people in our department need access to the project files and department notes to be able to do their work on the project. For organization, documentation, and financial regulation, all Section 106 project compliance work is archived in our system.

Just as the majority of State Historic Preservation Offices elect to have companies submit their proposed project directly to their office in the format they require, as a sovereign nation, we have the right to ask for the same courtesy.

We require that you submit Form 620 or 621, complete with all of its attachments to our website.

It would expedite the process of getting your project into compliance if you would wait and submit your proposed project to our department when Form 620/621 and all of its attachments are ready - particularly the complete cultural resource report.We waste quite a bit of time contacting companies and searching for the Form 620/621 if the proposed project is submitted to us with only a dot on the map.

If you have any questions or need more information please contact FCC specialist Susie Fox at siouxz_05@hotmail.com and 701-766-4031, or THPO Erich Longie, PHD at thpo@gondtc.com and 701-766-4032.

2. Attorney Montana & Associates LLC - Crow Creek Sioux Tribe - N12923 N Prairie Rd Osseo, WI - CCSTFCCTCNS@outlook.com - 605-881-1227 (ext: 1) - electronic mail

3. TCNS Compliance Reviewer Alicia Cloud - Sisseton-Wahpeton Oyate of the Lake Traverse Reservation - (PO Box: 907) Sisseton, SD - SWO_TCNS@swo-nsn.gov; virginia.m.w.oboyle@gmail.com - 605-698-3584 - electronic mail
Exclusions: The Sisseton Wahpeton Oyate Nation requirement for consultation is digitally through our departmental website. Our website is https://linkprotect.cudasvc.com/url?a=http%3a%2f%2fsisseton.heritageconsultation.com&c=E,1,8Wka-6IWLivm6VUWmh8zSJmgFGzpcSIIGeKTDC2zkeKmRvBROmvtikXea_vDucWlIPwmsDG0SWzR5y8o36nGjchvF-vQ0fA1l_jrGI78T1Ldb6jm_0Y76QY,&typo=1

We do not accept mailed paper or emailed digital submissions of project material.Tospeed up our response time and to be in compliance with our environmental practices, we do not accept paper submissions. All proposed projects must be processed through our website. Multiple people in our department need access to the project files and department notes to be able to do their work on the project. For organization, documentation, and financial regulation, all Section 106 project compliance work is archived in our system.

Just as the majority of State Historic Preservation Offices electto have companies submit their proposed project directly to their office in the format they require, as a sovereign nation, we have the right to ask for the same courtesy.

We require that you submit Form 620 or 621, complete with all of its attachments to our website.

It would expedite the process of getting your project into compliance if you would wait and submit your proposed project to our department when Form 620/621 and all of its attachments are ready - particularly the complete cultural resource report. We waste quite a bit of time contacting companies and searching for the Form 620/621 if the proposed project is submitted to us with only a dot on the map.

If you have any questions or need more information please contact FCC specialist Alicia Cloud at SWO_TCNS@swo-nsn.gov and 605-698-8306, or THPO Dianne Desrosiers at dianned@swo-nsn.gov and 605-698-8225.

4. CPD/THPO Randy Teboe - Winnebago Tribe of Nebraska - P.O. Box 687 Winnebago, NE - randy.teboe@winnebagotribe.com - 402-878-3313 - electronic mail and regular mail

5. Tribal Historical Cultural Preservation Officer Thomas Wabnum - Prairie Band Potawatomi Nation - Government Center 16281 Q Road Mayetta, KS - thomaswabnum@pbpnation.org - 785-966-4016 - electronic mail and regular mail

If the applicant/tower builder receives no response from the Prairie Band Potawatomi Nation within 30 days after notification through TCNS, the Prairie Band Potawatomi Nation has no interest in participating in pre-construction review for the proposed site. The Applicant/tower builder, however, must immediately notify the Prairie Band Potawatomi Nation in the event archaeological properties or human remains are discovered during construction, consistent with Section IX of the Nationwide Programmatic Agreement and applicable law.

6. Tribal Historic Preservation Officer Elsie Whitehorn - Otoe-Missouria Tribe of Indians - 8151 Highway 177 Red Rock, OK - thpo@omtribe.org; ewhitehorn@omtribe.org - 580-723-4434 (ext: 202) - electronic mail
Exclusions: For submittal procedures, please contact:

Elsie Whitehorn
Tribal Historic Preservation Officer
580-723-4466 x 202
ewhitehorn@omtribe.org
thpo@omtribe.org

7. THPO Halona Cabe - Ponca Tribe of Indians of Oklahoma - 121 White Eagle Dr Ponca City, OK - halona.clawson@ponca.com; thpo@ponca.com - 580-763-0120 - electronic mail

8. THPO Tracy Wind - Citizen Potawatomi Nation - 1899 S. Gordon Cooper Drive Shawnee, OK - tcns@potawatomi.org; tracy.wind@potawatomi.org - 405-878-5830 - electronic mail
Exclusions: Email the following information to: tcns@potawatomi.org; tracy.wind@potawatomi.org

Contact information including contact person name, e-mail & phone number

SHPO 620/621 packet including SHPO response. We do not require a SHPO response for Collocations.

If excluded from SHPO review please follow FCC guidelines which state-at minimum, this alternative submission must include contact information for the applicant, a map of the proposed location of the facility, coordinates of the proposed facility, a description of the facility to be constructed including all proposed elements (such as, for example, access roads), and a description of the proposed site, including both aerial and site photographs.

Please remember to clearly indicate the TCNS number the FCC has supplied you to identify your project on ALL correspondence with CPN.

9. THPO Michael Blackwolf - Fort Belknap Indian Community - 656 Agency Main Street Harlem, MT - mblackwolf@ftbelknap.org; thpocompliance@ftbelknap.org - 406-353-2293 - electronic mail and regular mail

10. THPO Devin Oldman - Northern Arapaho - (PO Box: 67) St. Stephens, WY - pejutathpo@gmail.com; cbearing.nathpo@gmail.com - 307-856-1628 - electronic mail and regular mail
Exclusions: PLEASE SEND AN ARCHAEOLOGICAL SURVEY OR SITE INVENTORY/MAP FOR THE AREA WITHIN 1 MILE OF THE APE FOR PRE-CONSTRUCTION, COLLOCATION PROJECTS AND PTC POLES. The request gives the tribe an opportunity to comment on past projects that are now proposed as collocation projects.

The Northern Arapaho Tribe requests a legal description of the proposed site (township, range, section and topo map name).

The Northern Arapaho Tribe requests a chronology if sites are within the 1 mile radius of the APE.

The Northern Arapaho Tribe requests information of Native American tribes identified having traditional use within the 1 mile radius of the APE. Ethnographic reports for the Arapaho are requested.

The Northern Arapaho tribe may request a site visit for areas of significance to the tribe's history.

PLEASE ONLY SEND HARDCOPIES OF REPORTS BY MAIL. DO NOT EMAIL REPORTS.The Northern Arapaho Tribe, THPO' at P.O. Box 67, St. Stephens, WY 82524. ATTN: Devin Oldman. Please include the TCNS number on all correspondence.

ANY QUESTIONS CALL OR EMAIL:

DEVIN OLDMAN
3078561628
nathpodd@gmail.com

11. Historic Preservation Director Johnathan L Buffalo - Sac & Fox Tribe of the Mississippi in Iowa - 349 Meskwaki Road Tama, IA - sp.historical@meskwaki-nsn.gov - 641-484-3185 - electronic mail and regular mail

12. Environmental Director John Rodwan - Huron Potawatomi - 2221 1-1/2 Mile Rd Fulton, MI - jrodwan@nhbpi.com - 269-729-5151 - electronic mail

13. THPO Gary Loonsfoot Jr - Keweenaw Bay Indian Community - 16429 Beartown Road . Baraga, MI - gloonsfoot@kbic-nsn.gov - 906-

353-4278 - electronic mail and regular mail

14. Historic Preservation Director Jonnie J Sam II - Little River Band of Ottawa Indians - 2608 Government Center Drive Manistee, MI - jsam@lrboi-nsn.gov - 231-723-8288 - electronic mail

15. Tribal Historic Preservation Officer Matthew Bussler - Pokagon Band of Potawatomi Indians - 58620 Sink Road (PO Box: 180) Dowagiac, MI - Matthew.Bussler@pokagonband-nsn.gov - 269-783-9291 - electronic mail and regular mail

If the applicant/tower builder receives no response from the Pokagon Band of Potawatomi Indians within 30 days after notification through TCNS, the Pokagon Band of Potawatomi Indians has no interest in participating in pre-construction review for the proposed site. The Applicant/tower builder,
however, must immediately notify the Pokagon Band of Potawatomi Indians in the event archaeological properties or human remains are discovered during construction, consistent with Section IX of the Nationwide Programmatic Agreement and applicable law.

16. Tribal Archaeologist/THPO Kade M Ferris MS - Red Lake Band of Chippewa Indians of Minnesota - (PO Box: 274) Red Lake, MN - kade.ferris@redlakenation.org - 218-679-1691 - electronic mail

If the applicant/tower builder receives no response from the Red Lake Band of Chippewa Indians of Minnesota within 30 days after notification through TCNS, the Red Lake Band of Chippewa Indians of Minnesota has no interest in participating in pre-construction review for the proposed site. The Applicant/tower builder,
however, must immediately notify the Red Lake Band of Chippewa Indians of Minnesota in the event archaeological properties or human remains are discovered during construction, consistent with Section IX of the Nationwide Programmatic Agreement and applicable law.

17. THPO and NAGPRA Representative Daisy McGeshick Ms - Lac Vieux Desert Band of Lake Superior Chippewa Indians - E23857 Poplar Circle (PO Box: 249) Watersmeet, MI - daisy.mcgeshick@lvdtribal.com - 906-358-0137 - electronic mail

18. THPO Noah C White III - Prairie Island Indian Community - 5636 Sturgeon Lake Road Welch, MN - celltower@piic.org - 651-385-4175 - electronic mail

If the applicant/tower builder receives no response from the Prairie Island Indian Community within 30 days after notification through TCNS, the Prairie Island Indian Community has no interest in participating in pre-construction review for the proposed site. The Applicant/tower builder,
however, must immediately notify the Prairie Island Indian Community in the event archaeological properties or human remains are discovered during construction, consistent with Section IX of the Nationwide Programmatic Agreement and applicable law.

19. THPO Samantha Odegard - Upper Sioux Community of Minnesota - 5722 Travers Lane (PO Box: 147) Granite Falls, MN - THPO@uppersiouxcommunity-nsn.gov; THPO@uppersiouxcommunity-nsn.gov - 320-564-3853 (ext: 6334) - electronic mail

20. THPO Edith Leoso - Bad River Band of Lake Superior Tribe of Chippewa Indians - (PO Box: 39) Odanah, WI - thpo@badriver-nsn.gov; THPOAsst@badriver-nsn.gov - 715-682-7123 - electronic mail

If the applicant/tower builder receives no response from the Bad River Band of Lake Superior Tribe of Chippewa Indians within 30 days after notification through TCNS, the Bad River Band of Lake Superior Tribe of Chippewa Indians has no interest in participating in pre-construction review for the proposed site. The Applicant/tower builder,
however, must immediately notify the Bad River Band of Lake Superior Tribe of Chippewa Indians in the event archaeological properties or human remains are discovered during construction, consistent with Section IX of the Nationwide Programmatic Agreement and applicable law.

21. Tribal Historic Preservation Officer William Quackenbush - Ho-Chunk Nation - (PO Box: 667) Black River Falls, WI -

bill.quackenbush@ho-chunk.com - 715-284-7181 (ext: 1121) - electronic mail

22. THPO Marvin DeFoe - Red Cliff Band of Lake Superior Chippewa Indians of Wisconsin - 88455 Pike Road, HWY 13 Bayfield, WI - Marvin.DeFoe@redcliff-nsn.gov; Edwina.Buffalo-Reyes@redcliff-nsn.gov - 715-779-3700 (ext: 4242) - electronic mail

23. Tribal Historic Preservation Officer Adam J VanZile - Sokaogon Chippewa Community - 3051 Sand Lake Road Crandon, WI - thpo@scc-nsn.gov - 715-478-6448 - electronic mail and regular mail

If the applicant/tower builder receives no response from the Sokaogon Chippewa Community within 30 days after notification through TCNS, the Sokaogon Chippewa Community has no interest in participating in pre-construction review for the proposed site. The Applicant/tower builder, however, must immediately notify the Sokaogon Chippewa Community in the event archaeological properties or human remains are discovered during construction, consistent with Section IX of the Nationwide Programmatic Agreement and applicable law.

24. THPO Brett Barnes - Eastern Shawnee Tribe of Oklahoma - 70500 East 128 Road Wyandotte, OK - celltower@estoo.net - 918-666-2435 (ext: 1845) - regular mail
Exclusions: DO NOT EMAIL DOCUMENTATION; it will be deleted without being opened.
Submit one printed color copy by US postal mail or other parcel carrier of all documentation to:

Eastern Shawnee Tribe
Attn: Cell Tower Program
70500 E. 128 Rd.
Wyandotte, OK 74370

Provide a 1-page cover letter with the following information:
a. TCNS Number
b. Company Name
c. Project Name, City, County, State
d. Project type
e. Project coordinates
f. Contact information

The Eastern Shawnee Procedures document is available and highly recommended for guidance; send an email to celltower@estoo.net requesting our most current copy.

25. THPO Diane Hunter - Miami Tribe of Oklahoma - (PO Box: 1326) Miami, OK - swillard@miamination.com; dhunter@miamination.com - 918-541-1390 - electronic mail

26. EPA Cheryl Stafford - Ottawa Tribe of Oklahoma - (PO Box: 110) Miami, OK - cherylstafford@sbcglobal.net - 918-541-1902 - regular mail

27. THPO Sherri Clemons - Wyandotte Nation - 64700 E, Hwy 60 Wyandotte, OK - algonquinconsultants@gmail.com; algonquin@neok.com - 918-678-6344 - electronic mail and regular mail

28. THPO Kim Jumper - Shawnee Tribe - 29 South 69A Highway Miami, OK - kimjumper@shawnee-tribe.com - 918-542-2441 - regular mail

29. THPO Jonathan Windy Boy - Chippewa Cree Tribe of the Rocky Boy's Reservation - 9740 Upper Box Elder Road (PO Box: 230) Box Elder, MT - jonathan.windyboy@nei-yahw.com; falene.russette@nei-yahw.com - 406-395-4700 - electronic mail
Exclusions: The Chippewa Cree Tribe performs its reviews of FCC undertakings and projects through its arrangement with I Response; a Tribally-owned enterprise. Please send all of your Forms 620 and Forms 621 to I Response at https://linkprotect.cudasvc.com/url?a=http%3a%2f%2fapp.iresponse106.com%2f.&c=E,1,B30Mxem4T2w2NPpNnSXnadK-6AXsgcStvfZ-mZ27785VOF9_UaEoVmNkkJxjcZTJd0yWpD9MY0U7j1PBXbxP1SBIBbhhoApCE2YBJguLevW4iWvw8T2BOuvY&typo=1 The reviews will begin once all the required documentation has been received at https://linkprotect.cudasvc.com/url?a=http%3a%2f%2fapp.iresponse106.com%2f.&c=E,1,OHtTBVk-YHp377BxgkZZ4buwh_CvEwHqUEdorVfaRl5Yfihc33e9FNTgZmQYYpmlCbxcRtL5BnqEZylap6Hf3AobcUNr6ZxJpyLVE0H37cDQbzfpJkSwb-f6RoYl&typo=1 If the qualified and professional reviewers determine that additional information is required, or that field work is required, they will contact you through the I Response system and through TCNS. If the Tribe determines that the proposed project will have an effect on historic properties and/or Tribal religious and cultural sites or properties, we will provide notice to the project proponent and to the FCC.

30. THPO Melinda J Young - Lac du Flambeau Band of Lake Superior Chippewa Indians - Tribal Historic Preservation Office (PO Box: 67) Lac du Flambeau, WI - ldfthpo@ldftribe.com - 715-588-2139 - regular mail

31. THPO David Grignon - Menominee Indian Tribe of Wisconsin - (PO Box: 910) Keshena, WI - dgrignon@mitw.org - 715-799-5258 - electronic mail and regular mail

32. Acting THPO Jeff Desjarlais Jr - Turtle Mountain Band of Chippewa - 4180 HWY 281 West (PO Box: 900) Belcourt, ND - dayla.walter@tmbci.org; desjarlaisjr.jeffrey@yahoo.com - 701-477-2640 - electronic mail and regular mail

The notification that you provided was also forwarded to the following SHPOs in the State in which you propose to construct and neighboring States. The information was provided to these SHPOs as a courtesy for their information and planning. You need make no effort at this time to follow up with any SHPO that does not respond to this notification. Prior to construction, you must provide the SHPO of the State in which you propose to construct (or the Tribal Historic Preservation Officer, if the project will be located on certain Tribal lands), with a Submission Packet pursuant to Section VII.A of the NPA unless the project is excluded from SHPO review under Section III D or E of the NPA.

33. SHPO Robert E Carter Jr - Department of Natural Resources - 402 West Washington Street Indiana Govt. Center South, Room W256 Indianapolis, IN - dhpa@dnr.state.in.us - 317-232-1646 - electronic mail and regular mail

34. Deputy SHPO Jon C Smith - Department of Natural Resources - 402 West Washington Street Indiana Govt. Center South, Room W256 Indianapolis, IN - jsmith@dnr.state.in.us - 317-232-1646 - electronic mail

35. SHPO Brian D Conway - State Historic Preservation Office, Michigan Historical Center - (PO Box: 30740) Lansing, MI - conwaybd@state.mi.us - 517-373-1630 - electronic mail

36. Amanda Terrell - Ohio History Connection - 800 E. 17th Avenue Columbus, OH - aterrell@ohiohistory.org - 614-298-2000 - electronic mail and regular mail

TCNS automatically forwards all notifications to all Tribal Nations and SHPOs that have an expressed interest in the geographic area of a proposal. However, if a proposal for PTC wayside poles falls within a designated exclusion, you need not expect any response and need not pursue any additional process with that Tribal Nation or SHPO. In addition, a particular Tribal Nation or SHPO may also set forth policies or procedures within its details box that exclude from review certain facilities (for example, a statement that it does not review collocations with no ground disturbance; or that indicates that no response within 30 days indicates no interest in participating in pre-construction review).

Please be advised that the FCC cannot guarantee that the contact(s) listed above have opened and reviewed an electronic or regular mail notification. If you learn that any of the above contact information is no longer valid, please contact the FCC by emailing tcnshelp@fcc.gov. The following information relating to the proposed tower was forwarded to the person(s) listed above:

Notification Received: 12/04/2018
Notification ID: 180995
Excluded from SHPO Review: No
Tower Owner Individual or Entity Name: Pyramid Network Services
Consultant Name: Mindi L Okai
Street Address: 10845 Olive Blvd.
Suite 260
City: St. Louis
State: MISSOURI
Zip Code: 63141
Phone: 314-997-6111
Email: tribal@trileaf.com

Structure Type: LTOWER - Lattice Tower
Latitude: 43 deg 15 min 45.6 sec N
Longitude: 85 deg 48 min 27.7 sec W
Location Description: White Road
City: Bailey
State: MICHIGAN
County: MUSKEGON
Detailed Description of Project: Legal Description: S13 T10N R13W
Ground Elevation: 264.6 meters
Support Structure: 144.8 meters above ground level
Overall Structure: 148.7 meters above ground level
Overall Height AMSL: 413.3 meters above mean sea level

If you have any questions or comments regarding this notice, please contact the FCC using the electronic Help Request form located on the FCC's website at:

https://linkprotect.cudasvc.com/url?a=https%3a%2f%2fwww.fcc.gov%2fwireless%2favailable-support-services&c=E,1,Xt6bXIiB2ZoOWDLRo0DKldcwnYghVPrCt9td1BY7le-_WKcU3_nxCcjF3ejLq8pBBeOw6SDAHcuSbiLB18N9zCcBwJruRdaZhGUpevPFzGeC6dckrszAMKw,&typo=1

You may also call the FCC Support Center at (877) 480-3201 (TTY 717-338-2824). Hours are from 8:00 a.m. to 6:00 p.m. Eastern Time, Monday through Friday (except Federal holidays). To provide quality service and ensure security, all telephone calls are recorded.

Thank you,
Federal Communications Commission

From: towernotifyinfo@fcc.gov
To: tribal
Cc: tcnsweekly@fcc.gov
Subject: NOTICE OF ORGANIZATION(S) WHICH WERE SENT PROPOSED TOWER CONSTRUCTION NOTIFICATION INFORMATION - Email ID #6120782
Date: Friday, December 7, 2018 2:03:06 AM

Dear Applicant:

Thank you for using the Federal Communications Commission's (FCC) Tower Construction Notification System (TCNS). The purpose of this electronic mail message is to inform you that the following authorized persons were sent the notification that you provided through TCNS, which relates to your proposed antenna structure. The information was forwarded by the FCC to authorized TCNS users by electronic mail and/or regular mail (letter). We note that the review period for all parties begins upon receipt of the Submission Packet pursuant to Section VII.A of the NPA and notifications that do not provide this serve as information only.

Persons who have received the notification that you provided include leaders or their designees of federally-recognized American Indian Tribes, including Alaska Native Villages (collectively "Tribal Nations"), Native Hawaiian Organizations (NHOs), and State Historic Preservation Officers (SHPOs). For your convenience in identifying the referenced Tribal Nations and NHOs and in making further contacts, the City and State of the Seat of Government for each Tribal Nation and NHO, as well as the designated contact person, is included in the listing below. We note that Tribal Nations may have Section 106 cultural interests in ancestral homelands or other locations that are far removed from their current Seat of Government. Pursuant to the Commission's rules as set forth in the Nationwide Programmatic Agreement for Review of Effects on Historic Properties for Certain Undertakings Approved by the Federal Communications Commission (NPA), all Tribal Nations and NHOs listed below must be afforded a reasonable opportunity to respond to this notification, consistent with the procedures set forth below, unless the proposed construction falls within an exclusion designated by the Tribal Nation or NHO. (NPA, Section IV.F.4).

The notification that you provided was forwarded to the following Tribal Nations and NHOs. A Tribal Nation or NHO may not respond until a full Submission Packet is provided. If, upon receipt, the Tribal Nation or NHO does not respond within a reasonable time, you should make a reasonable effort at follow-up contact, unless the Tribal Nation or NHO has agreed to different procedures (NPA, Section IV.F.5). In the event a Tribal Nation or NHO does not respond to a follow-up inquiry, or if a substantive or procedural disagreement arises between you and a Tribal Nation or NHO, you must seek guidance from the Commission (NPA, Section IV.G). These procedures are further set forth in the FCC's Second Report and Order released on March 30, 2018 (FCC 18-30).

1. FCC Compliance Officer Susie Fox - Spirit Lake Nation - (PO Box: 359) Fort Totten, ND - siouxz_05@hotmail.com; virginia.m.w.oboyle@gmail.com - 701-766-4031 - electronic mail
Exclusions: The Spirit Lake Nation requirement for consultation is digitally through our departmental website. Our website is https://linkprotect.cudasvc.com/url?a=http%3a%2f%2fcms.spiritlakeconsulting.com&c=E,1,LM8l7ruE8UJbhubiHTgkHvRc8y_n-1e_kL6JZMa7jrpxmlSxs5zwVITtemrDHd_my3IGojk2YD9mwgY5OgQhPHhzzIWpxZUusFTAo3v3wFzDmQ_ykxOT-Q,,&typo=1

We do not accept mailed paper or emailed digital submissions of project material. To speed up our response time and to be in compliance with our environmental practices we do not accept paper submissions. All proposed projects must be processed through our website. Multiple people in our department need access to the project files and department notes to be able to do their work on the project. For organization, documentation, and financial regulation, all Section 106 project compliance work is archived in our system.

Just as the majority of State Historic Preservation Offices elect to have companies submit their proposed project directly to their office in the format they require, as a sovereign nation, we have the right to ask for the same courtesy.

We require that you submit Form 620 or 621, complete with all of its attachments to our website.

It would expedite the process of getting your project into compliance if you would wait and submit your proposed project to our department when Form 620/621 and all of its attachments are ready - particularly the complete cultural resource report.We waste quite a bit of time contacting companies and searching for the Form 620/621 if the proposed project is submitted to us with only a dot on the map.

If you have any questions or need more information please contact FCC specialist Susie Fox at siouxz_05@hotmail.com and 701-766-4031, or THPO Erich Longie, PHD at thpo@gondtc.com and 701-766-4032.

2. Attorney Montana & Associates LLC - Crow Creek Sioux Tribe - N12923 N Prairie Rd Osseo, WI - CCSTFCCTCNS@outlook.com - 605-881-1227 (ext: 1) - electronic mail

3. TCNS Compliance Reviewer Alicia Cloud - Sisseton-Wahpeton Oyate of the Lake Traverse Reservation - (PO Box: 907) Sisseton, SD - SWO_TCNS@swo-nsn.gov; virginia.m.w.oboyle@gmail.com - 605-698-3584 - electronic mail
Exclusions: The Sisseton Wahpeton Oyate Nation requirement for consultation is digitally through our departmental website. Our website is https://linkprotect.cudasvc.com/url?a=http%3a%2f%2fsisseton.heritageconsultation.com&c=E,1,8Wka-6IWLivm6VUWmh8zSJmgFGzpcSIIGeKTDC2zkeKmRvBROmvtikXea_vDucWlIPwmsDG0SWzR5y8o36nGjchvF-vQ0fA1l_jrGI78T1Ldb6jm_0Y76QY,&typo=1

We do not accept mailed paper or emailed digital submissions of project material.Tospeed up our response time and to be in compliance with our environmental practices, we do not accept paper submissions. All proposed projects must be processed through our website. Multiple people in our department need access to the project files and department notes to be able to do their work on the project. For organization, documentation, and financial regulation, all Section 106 project compliance work is archived in our system.

Just as the majority of State Historic Preservation Offices electto have companies submit their proposed project directly to their office in the format they require, as a sovereign nation, we have the right to ask for the same courtesy.

We require that you submit Form 620 or 621, complete with all of its attachments to our website.

It would expedite the process of getting your project into compliance if you would wait and submit your proposed project to our department when Form 620/621 and all of its attachments are ready - particularly the complete cultural resource report. We waste quite a bit of time contacting companies and searching for the Form 620/621 if the proposed project is submitted to us with only a dot on the map.

If you have any questions or need more information please contact FCC specialist Alicia Cloud at SWO_TCNS@swo-nsn.gov and 605-698-8306, or THPO Dianne Desrosiers at dianned@swo-nsn.gov and 605-698-8225.

4. CPD/THPO Randy Teboe - Winnebago Tribe of Nebraska - P.O. Box 687 Winnebago, NE - randy.teboe@winnebagotribe.com - 402-878-3313 - electronic mail and regular mail

5. Tribal Historical Cultural Preservation Officer Thomas Wabnum - Prairie Band Potawatomi Nation - Government Center 16281 Q Road Mayetta, KS - thomaswabnum@pbpnation.org - 785-966-4016 - electronic mail and regular mail

If the applicant/tower builder receives no response from the Prairie Band Potawatomi Nation within 30 days after notification through TCNS, the Prairie Band Potawatomi Nation has no interest in participating in pre-construction review for the proposed site. The Applicant/tower builder, however, must immediately notify the Prairie Band Potawatomi Nation in the event archaeological properties or human remains are discovered during construction, consistent with Section IX of the Nationwide Programmatic Agreement and applicable law.

6. Tribal Historic Preservation Officer Elsie Whitehorn - Otoe-Missouria Tribe of Indians - 8151 Highway 177 Red Rock, OK - thpo@omtribe.org; ewhitehorn@omtribe.org - 580-723-4434 (ext: 202) - electronic mail
Exclusions: For submittal procedures, please contact:

Elsie Whitehorn
Tribal Historic Preservation Officer
580-723-4466 x 202
ewhitehorn@omtribe.org
thpo@omtribe.org

7. THPO Halona Cabe - Ponca Tribe of Indians of Oklahoma - 121 White Eagle Dr Ponca City, OK - halona.clawson@ponca.com; thpo@ponca.com - 580-763-0120 - electronic mail

8. THPO Tracy Wind - Citizen Potawatomi Nation - 1899 S. Gordon Cooper Drive Shawnee, OK - tcns@potawatomi.org; tracy.wind@potawatomi.org - 405-878-5830 - electronic mail
Exclusions: Email the following information to: tcns@potawatomi.org; tracy.wind@potawatomi.org

Contact information including contact person name, e-mail & phone number

SHPO 620/621 packet including SHPO response. We do not require a SHPO response for Collocations.

If excluded from SHPO review please follow FCC guidelines which state-at minimum, this alternative submission must include contact information for the applicant, a map of the proposed location of the facility, coordinates of the proposed facility, a description of the facility to be constructed including all proposed elements (such as, for example, access roads), and a description of the proposed site, including both aerial and site photographs.

Please remember to clearly indicate the TCNS number the FCC has supplied you to identify your project on ALL correspondence with CPN.

9. THPO Michael Blackwolf - Fort Belknap Indian Community - 656 Agency Main Street Harlem, MT - mblackwolf@ftbelknap.org; thpocompliance@ftbelknap.org - 406-353-2293 - electronic mail and regular mail

10. THPO Devin Oldman - Northern Arapaho - (PO Box: 67) St. Stephens, WY - pejutathpo@gmail.com; cbearing.nathpo@gmail.com - 307-856-1628 - electronic mail and regular mail
Exclusions: PLEASE SEND AN ARCHAEOLOGICAL SURVEY OR SITE INVENTORY/MAP FOR THE AREA WITHIN 1 MILE OF THE APE FOR PRE-CONSTRUCTION, COLLOCATION PROJECTS AND PTC POLES. The request gives the tribe an opportunity to comment on past projects that are now proposed as collocation projects.

The Northern Arapaho Tribe requests a legal description of the proposed site (township, range, section and topo map name).

The Northern Arapaho Tribe requests a chronology if sites are within the 1 mile radius of the APE.

The Northern Arapaho Tribe requests information of Native American tribes identified having traditional use within the 1 mile radius of the APE. Ethnographic reports for the Arapaho are requested.

The Northern Arapaho tribe may request a site visit for areas of significance to the tribe's history.

PLEASE ONLY SEND HARDCOPIES OF REPORTS BY MAIL. DO NOT EMAIL REPORTS.The Northern Arapaho Tribe, THPO' at P.O. Box 67, St. Stephens, WY 82524. ATTN: Devin Oldman. Please include the TCNS number on all correspondence.

ANY QUESTIONS CALL OR EMAIL:

DEVIN OLDMAN
3078561628
nathpodd@gmail.com

11. Historic Preservation Director Johnathan L Buffalo - Sac & Fox Tribe of the Mississippi in Iowa - 349 Meskwaki Road Tama, IA - sp.historical@meskwaki-nsn.gov - 641-484-3185 - electronic mail and regular mail

12. Environmental Director John Rodwan - Huron Potawatomi - 2221 1-1/2 Mile Rd Fulton, MI - jrodwan@nhbpi.com - 269-729-5151 - electronic mail

13. THPO Gary Loonsfoot Jr - Keweenaw Bay Indian Community - 16429 Beartown Road . Baraga, MI - gloonsfoot@kbic-nsn.gov - 906-

353-4278 - electronic mail and regular mail

14. Historic Preservation Director Jonnie J Sam II - Little River Band of Ottawa Indians - 2608 Government Center Drive Manistee, MI - jsam@lrboi-nsn.gov - 231-723-8288 - electronic mail

15. Tribal Historic Preservation Officer Matthew Bussler - Pokagon Band of Potawatomi Indians - 58620 Sink Road (PO Box: 180) Dowagiac, MI - Matthew.Bussler@pokagonband-nsn.gov - 269-783-9291 - electronic mail and regular mail

If the applicant/tower builder receives no response from the Pokagon Band of Potawatomi Indians within 30 days after notification through TCNS, the Pokagon Band of Potawatomi Indians has no interest in participating in pre-construction review for the proposed site. The Applicant/tower builder,
however, must immediately notify the Pokagon Band of Potawatomi Indians in the event archaeological properties or human remains are discovered during construction, consistent with Section IX of the Nationwide Programmatic Agreement and applicable law.

16. Tribal Archaeologist/THPO Kade M Ferris MS - Red Lake Band of Chippewa Indians of Minnesota - (PO Box: 274) Red Lake, MN - kade.ferris@redlakenation.org - 218-679-1691 - electronic mail

If the applicant/tower builder receives no response from the Red Lake Band of Chippewa Indians of Minnesota within 30 days after notification through TCNS, the Red Lake Band of Chippewa Indians of Minnesota has no interest in participating in pre-construction review for the proposed site. The Applicant/tower builder,
however, must immediately notify the Red Lake Band of Chippewa Indians of Minnesota in the event archaeological properties or human remains are discovered during construction, consistent with Section IX of the Nationwide Programmatic Agreement and applicable law.

17. THPO and NAGPRA Representative Daisy McGeshick Ms - Lac Vieux Desert Band of Lake Superior Chippewa Indians - E23857 Poplar Circle (PO Box: 249) Watersmeet, MI - daisy.mcgeshick@lvdtribal.com - 906-358-0137 - electronic mail

18. THPO Noah C White III - Prairie Island Indian Community - 5636 Sturgeon Lake Road Welch, MN - celltower@piic.org - 651-385-4175 - electronic mail

If the applicant/tower builder receives no response from the Prairie Island Indian Community within 30 days after notification through TCNS, the Prairie Island Indian Community has no interest in participating in pre-construction review for the proposed site. The Applicant/tower builder,
however, must immediately notify the Prairie Island Indian Community in the event archaeological properties or human remains are discovered during construction, consistent with Section IX of the Nationwide Programmatic Agreement and applicable law.

19. THPO Samantha Odegard - Upper Sioux Community of Minnesota - 5722 Travers Lane (PO Box: 147) Granite Falls, MN - THPO@uppersiouxcommunity-nsn.gov; THPO@uppersiouxcommunity-nsn.gov - 320-564-3853 (ext: 6334) - electronic mail

20. THPO Edith Leoso - Bad River Band of Lake Superior Tribe of Chippewa Indians - (PO Box: 39) Odanah, WI - thpo@badriver-nsn.gov; THPOAsst@badriver-nsn.gov - 715-682-7123 - electronic mail

If the applicant/tower builder receives no response from the Bad River Band of Lake Superior Tribe of Chippewa Indians within 30 days after notification through TCNS, the Bad River Band of Lake Superior Tribe of Chippewa Indians has no interest in participating in pre-construction review for the proposed site. The Applicant/tower builder,
however, must immediately notify the Bad River Band of Lake Superior Tribe of Chippewa Indians in the event archaeological properties or human remains are discovered during construction, consistent with Section IX of the Nationwide Programmatic Agreement and applicable law.

21. Tribal Historic Preservation Officer William Quackenbush - Ho-Chunk Nation - (PO Box: 667) Black River Falls, WI -

bill.quackenbush@ho-chunk.com - 715-284-7181 (ext: 1121) - electronic mail

22. THPO Marvin DeFoe - Red Cliff Band of Lake Superior Chippewa Indians of Wisconsin - 88455 Pike Road, HWY 13 Bayfield, WI - Marvin.DeFoe@redcliff-nsn.gov; Edwina.Buffalo-Reyes@redcliff-nsn.gov - 715-779-3700 (ext: 4242) - electronic mail

23. Tribal Historic Preservation Officer Adam J VanZile - Sokaogon Chippewa Community - 3051 Sand Lake Road Crandon, WI - thpo@scc-nsn.gov - 715-478-6448 - electronic mail and regular mail

If the applicant/tower builder receives no response from the Sokaogon Chippewa Community within 30 days after notification through TCNS, the Sokaogon Chippewa Community has no interest in participating in pre-construction review for the proposed site. The Applicant/tower builder, however, must immediately notify the Sokaogon Chippewa Community in the event archaeological properties or human remains are discovered during construction, consistent with Section IX of the Nationwide Programmatic Agreement and applicable law.

24. THPO Brett Barnes - Eastern Shawnee Tribe of Oklahoma - 70500 East 128 Road Wyandotte, OK - celltower@estoo.net - 918-666-2435 (ext: 1845) - regular mail
Exclusions: DO NOT EMAIL DOCUMENTATION; it will be deleted without being opened.
Submit one printed color copy by US postal mail or other parcel carrier of all documentation to:

Eastern Shawnee Tribe
Attn: Cell Tower Program
70500 E. 128 Rd.
Wyandotte, OK 74370

Provide a 1-page cover letter with the following information:
a. TCNS Number
b. Company Name
c. Project Name, City, County, State
d. Project type
e. Project coordinates
f. Contact information

The Eastern Shawnee Procedures document is available and highly recommended for guidance; send an email to celltower@estoo.net requesting our most current copy.

25. THPO Diane Hunter - Miami Tribe of Oklahoma - (PO Box: 1326) Miami, OK - swillard@miamination.com; dhunter@miamination.com - 918-541-1390 - electronic mail

26. EPA Cheryl Stafford - Ottawa Tribe of Oklahoma - (PO Box: 110) Miami, OK - cherylstafford@sbcglobal.net - 918-541-1902 - regular mail

27. THPO Sherri Clemons - Wyandotte Nation - 64700 E, Hwy 60 Wyandotte, OK - algonquinconsultants@gmail.com; algonquin@neok.com - 918-678-6344 - electronic mail and regular mail

28. THPO Kim Jumper - Shawnee Tribe - 29 South 69A Highway Miami, OK - kimjumper@shawnee-tribe.com - 918-542-2441 - regular mail

29. THPO Jonathan Windy Boy - Chippewa Cree Tribe of the Rocky Boy's Reservation - 9740 Upper Box Elder Road (PO Box: 230) Box Elder, MT - jonathan.windyboy@nei-yahw.com; falene.russette@nei-yahw.com - 406-395-4700 - electronic mail
Exclusions: The Chippewa Cree Tribe performs its reviews of FCC undertakings and projects through its arrangement with I Response; a Tribally-owned enterprise. Please send all of your Forms 620 and Forms 621 to I Response at https://linkprotect.cudasvc.com/url?a=http%3a%2f%2fapp.iresponse106.com%2f.&c=E,1,B30Mxem4T2w2NPpNnSXnadK-6AXsgcStvfZ-mZ27785VOF9_UaEoVmNkkJxjcZTJd0yWpD9MY0U7j1PBXbxP1SBIBbhhoApCE2YBJguLevW4iWvw8T2BOuvY&typo=1 The reviews will begin once all the required documentation has been received at https://linkprotect.cudasvc.com/url?a=http%3a%2f%2fapp.iresponse106.com%2f.&c=E,1,OHtTBVk-YHp377BxgkZZ4buwh_CvEwHqUEdorVfaRl5Yfihc33e9FNTgZmQYYpmlCbxcRtL5BnqEZylap6Hf3AobcUNr6ZxJpyLVE0H37cDQbzfpJkSwb-f6RoYl&typo=1 If the qualified and professional reviewers determine that additional information is required, or that field work is required, they will contact you through the I Response system and through TCNS. If the Tribe determines that the proposed project will have an effect on historic properties and/or Tribal religious and cultural sites or properties, we will provide notice to the project proponent and to the FCC.

30. THPO Melinda J Young - Lac du Flambeau Band of Lake Superior Chippewa Indians - Tribal Historic Preservation Office (PO Box: 67) Lac du Flambeau, WI - ldfthpo@ldftribe.com - 715-588-2139 - regular mail

31. THPO David Grignon - Menominee Indian Tribe of Wisconsin - (PO Box: 910) Keshena, WI - dgrignon@mitw.org - 715-799-5258 - electronic mail and regular mail

32. Acting THPO Jeff Desjarlais Jr - Turtle Mountain Band of Chippewa - 4180 HWY 281 West (PO Box: 900) Belcourt, ND - dayla.walter@tmbci.org; desjarlaisjr.jeffrey@yahoo.com - 701-477-2640 - electronic mail and regular mail

The notification that you provided was also forwarded to the following SHPOs in the State in which you propose to construct and neighboring States. The information was provided to these SHPOs as a courtesy for their information and planning. You need make no effort at this time to follow up with any SHPO that does not respond to this notification. Prior to construction, you must provide the SHPO of the State in which you propose to construct (or the Tribal Historic Preservation Officer, if the project will be located on certain Tribal lands), with a Submission Packet pursuant to Section VII.A of the NPA unless the project is excluded from SHPO review under Section III D or E of the NPA.

33. SHPO Robert E Carter Jr - Department of Natural Resources - 402 West Washington Street Indiana Govt. Center South, Room W256 Indianapolis, IN - dhpa@dnr.state.in.us - 317-232-1646 - electronic mail and regular mail

34. Deputy SHPO Jon C Smith - Department of Natural Resources - 402 West Washington Street Indiana Govt. Center South, Room W256 Indianapolis, IN - jsmith@dnr.state.in.us - 317-232-1646 - electronic mail

35. SHPO Brian D Conway - State Historic Preservation Office, Michigan Historical Center - (PO Box: 30740) Lansing, MI - conwaybd@state.mi.us - 517-373-1630 - electronic mail

36. Amanda Terrell - Ohio History Connection - 800 E. 17th Avenue Columbus, OH - aterrell@ohiohistory.org - 614-298-2000 - electronic mail and regular mail

TCNS automatically forwards all notifications to all Tribal Nations and SHPOs that have an expressed interest in the geographic area of a proposal. However, if a proposal for PTC wayside poles falls within a designated exclusion, you need not expect any response and need not pursue any additional process with that Tribal Nation or SHPO. In addition, a particular Tribal Nation or SHPO may also set forth policies or procedures within its details box that exclude from review certain facilities (for example, a statement that it does not review collocations with no ground disturbance; or that indicates that no response within 30 days indicates no interest in participating in pre-construction review).

Please be advised that the FCC cannot guarantee that the contact(s) listed above have opened and reviewed an electronic or regular mail notification. If you learn that any of the above contact information is no longer valid, please contact the FCC by emailing tcnshelp@fcc.gov. The following information relating to the proposed tower was forwarded to the person(s) listed above:

Notification Received: 12/04/2018
Notification ID: 180995
Excluded from SHPO Review: No
Tower Owner Individual or Entity Name: Pyramid Network Services
Consultant Name: Mindi L Okai
Street Address: 10845 Olive Blvd.
Suite 260
City: St. Louis
State: MISSOURI
Zip Code: 63141
Phone: 314-997-6111
Email: tribal@trileaf.com

Structure Type: LTOWER - Lattice Tower
Latitude: 43 deg 15 min 45.6 sec N
Longitude: 85 deg 48 min 27.7 sec W
Location Description: White Road
City: Bailey
State: MICHIGAN
County: MUSKEGON
Detailed Description of Project: Legal Description: S13 T10N R13W
Ground Elevation: 264.6 meters
Support Structure: 144.8 meters above ground level
Overall Structure: 148.7 meters above ground level
Overall Height AMSL: 413.3 meters above mean sea level

If you have any questions or comments regarding this notice, please contact the FCC using the electronic Help Request form located on the FCC's website at:

https://linkprotect.cudasvc.com/url?a=https%3a%2f%2fwww.fcc.gov%2fwireless%2favailable-support-services&c=E,1,Xt6bXIiB2ZoOWDLRo0DKldcwnYghVPrCt9td1BY7le-_WKcU3_nxCcjF3ejLq8pBBeOw6SDAHcuSbiLB18N9zCcBwJruRdaZhGUpevPFzGeC6dckrszAMKw,&typo=1

You may also call the FCC Support Center at (877) 480-3201 (TTY 717-338-2824). Hours are from 8:00 a.m. to 6:00 p.m. Eastern Time, Monday through Friday (except Federal holidays). To provide quality service and ensure security, all telephone calls are recorded.

Thank you,
Federal Communications Commission

TRILEAF™
ENVIRONMENTAL • ARCHITECTURE • ENGINEERING
10845 Olive Boulevard, Suite 260, Saint Louis, Missouri 63141 • 314.997.6111 www.trileaf.com

December 21, 2018

Bad River Band of Lake Superior Tribe of Chippewa Indians
Ms. Edith Leoso
P.O. Box 39
Odanah, WI 54861

RE: **Pyramid Network Services – Moore Park – Trileaf Project #646371**
White Road, Bailey, Michigan 49303
Muskegon County, Grant Quadrangle (USGS)
Latitude: 43° 15' 45.6" N, Longitude: 85° 48' 27.7" W
TCNS# 180995

Dear Ms. Leoso:

This project was originally submitted to your tribe via TCNS on December 7, 2018; TCNS #180995. Trileaf Corporation is in the process of completing a NEPA Review at the above referenced property. Our investigation includes determining if the site is contained in, on, or within the viewshed of a building, site, district, structure or object, significant in American history, architecture, archeology, engineering or culture, that is listed or eligible for listing on the State or National Registers of Historic Places, or located in or on, or within the viewshed of an Indian Religious Site. Trileaf has learned your tribe has an interest in property located within this County.

Our client proposes to construct a 475-foot-tall (488-feet-overall) self-support telecommunications tower and associated equipment within a proposed 80-foot by 80-foot (6,400-square-foot) lease area. An approximately 12-foot-wide access easement is proposed to extend north from the north side of the proposed telecommunications compound into a proposed service vehicle turn-around, and then east approximately 83.4 feet to an existing access drive. Currently, the site is forested land. The form 620/621 submission packet can be accessed at the following link and is also attached (if so requested) for your review:

Link: https://trileaf.sharefile.com/d-s84cc883e6eb4da9a

Please let us know if you have any objections or comments on this project as soon as possible. Contact me at (314) 997-6111 or email m.okai@trileaf.com or tribal@trileaf.com if you have any questions. Thank you for your assistance in this regard.

Sincerely,

Mindi Okai

Mindi Okai
Tribal Consultation Manager

TRILEAF™
ENVIRONMENTAL • ARCHITECTURE • ENGINEERING
10845 Olive Boulevard, Suite 260, Saint Louis, Missouri 63141 • 314.997.6111 www.trileaf.com

December 21, 2018

Chippewa Cree Tribe of the Rocky Boy's Reservation
Mr. Jonathan Windy Boy
9740 Upper Box Elder Road
P.O. Box 230
Box Elder, MT 59521

RE: **Pyramid Network Services – Moore Park – Trileaf Project #646371**
White Road, Bailey, Michigan 49303
Muskegon County, Grant Quadrangle (USGS)
Latitude: 43° 15' 45.6" N, Longitude: 85° 48' 27.7" W
TCNS# 180995

Dear Mr. Windy Boy:

This project was originally submitted to your tribe via TCNS on December 7, 2018; TCNS #180995. Trileaf Corporation is in the process of completing a NEPA Review at the above referenced property. Our investigation includes determining if the site is contained in, on, or within the viewshed of a building, site, district, structure or object, significant in American history, architecture, archeology, engineering or culture, that is listed or eligible for listing on the State or National Registers of Historic Places, or located in or on, or within the viewshed of an Indian Religious Site. Trileaf has learned your tribe has an interest in property located within this County.

Our client proposes to construct a 475-foot-tall (488-feet-overall) self-support telecommunications tower and associated equipment within a proposed 80-foot by 80-foot (6,400-square-foot) lease area. An approximately 12-foot-wide access easement is proposed to extend north from the north side of the proposed telecommunications compound into a proposed service vehicle turn-around, and then east approximately 83.4 feet to an existing access drive. Currently, the site is forested land. The form 620/621 submission packet can be accessed at the following link and is also attached (if so requested) for your review:

Link: https://trileaf.sharefile.com/d-s84cc883e6eb4da9a

Please let us know if you have any objections or comments on this project as soon as possible. Contact me at (314) 997-6111 or email m.okai@trileaf.com or tribal@trileaf.com if you have any questions. Thank you for your assistance in this regard.

Sincerely,

Mindi Okai

Mindi Okai
Tribal Consultation Manager

CCCRPD

Chippewa Cree Cultural Resources Preservation Department

"Our mission is to maintain and inspire the traditional values that relate to the Ojibwa and Nei-yahw way of life for its people through established principles: Culture, History, Language and Life."

To: Trileaf Date: 1/25/2019
Project: Moore
TCNS: 180995

The Chippewa Cree Tribe THPO has reviewed the project documentation submitted by _____Trileaf_____ for _____180995_____(use TCNS number and name from the Form 620 or 621 for FCC projects). The THPO has determined that the proposed project will have an effect on at least one Tribal religious or cultural site that the THPO has determined is eligible for listing on the National Register. The files provided by the SHPO for this project do not provide complete information on the significance of this site or sites. Because the project proponent's information is not complete, the THPO will need to undertake additional research to document the boundaries of this historic property and to identify its respective components. The information that we have on this project area/Area of Potential Effects (APE) is such that non-native archaeologists will not be able to accurately document the cultural resources within the APE. To properly complete the Section 106 process, we request that you comply with the rules and instructions of the Advisory Council on Historic Preservation (ACHP) to arrange for the Tribe's professional staff to visit and to investigate the proposed project and that the project proponent cover the standard costs to document the site as part of a reconnaissance survey. This will enable the Tribe to provide accurate boundaries and a clear statement of significance.

For additional information or to discuss this project, please contact Shastelle Swan at (406) 395-4700.

Thank you,

Jonathan Windy Boy
Tribal Historic Preservation Officer

9740 Upper Box Elder Road | P.O. Box 230 | Box Elder, MT 59521 |PHONE 406-395-4700 | FAX 406-395-5444

From:	Justin Moschelle
To:	Mindi Okai
Subject:	Re: Noted Added to 180995
Date:	Friday, March 22, 2019 11:20:01 AM
Attachments:	Outlook-1513032528.png

Hi Mindy, yes you are correct.

/R/

Justin Moschelle
Archaeologist

9740 Upper Box Elder Road
PO Box 230
Box Elder, MT 59521
O (406) 395-4215

This email and any files transmitted with it are confidential and intended solely for the use of the individual or entity to which they are addressed. Access to this email by anyone else is unauthorized. If you are not the intended recipient, any interception, copying, distribution, disclosure or use of this transmission or any information contained in it is strictly prohibited, and may be subject to criminal and civil penalties.

From: Mindi Okai <m.okai@trileaf.com>
Sent: Friday, March 22, 2019 10:13 AM
To: Justin Moschelle
Subject: FW: Noted Added to 180995

Hi Justin,
So, our client is ok to move forward with this project as long as they schedule the site visit with Chippewa Cree BEFORE they begin construction. Is that correct?

Thanks,

Mindi Okai
Tribal Consultation Manager

TRILEAF™
ENVIRONMENTAL • ARCHITECTURE • ENGINEERING
10845 Olive Blvd., Suite 260
St. Louis, MO 63141
(314) 997-6111 / Office

(314) 997-8066 / Fax

From: Tribal106 <mailer@nei-yahw.com>
Sent: Friday, March 22, 2019 10:05 AM
Subject: Noted Added to 180995

View Consult

Chippewa Cree Cultural Resource Department

Note Added

A new note has been added to TCNS: 180995 - Moore Park
Has Files? No
To clarify, CCCRPD is recommending a Tribal Field Technician conduct a field visit in the spring time to identify any culturally sensitive plants prior to ground disturbing activities. Thank you for consulting.

® tribal106.com 2015

TRILEAF™
ENVIRONMENTAL • ARCHITECTURE • ENGINEERING
10845 Olive Boulevard, Suite 260, Saint Louis, Missouri 63141 • 314.997.6111 www.trileaf.com

December 21, 2018

Citizen Potawatomi Nation
Ms. Kelli Mosteller
1899 Gordon Cooper Drive
Shawnee, OK 74801

RE: **Pyramid Network Services – Moore Park – Trileaf Project #646371**
White Road, Bailey, Michigan 49303
Muskegon County, Grant Quadrangle (USGS)
Latitude: 43° 15' 45.6" N, Longitude: 85° 48' 27.7" W
TCNS# 180995

Dear Ms. Mosteller:

This project was originally submitted to your tribe via TCNS on December 7, 2018; TCNS #180995. Trileaf Corporation is in the process of completing a NEPA Review at the above referenced property. Our investigation includes determining if the site is contained in, on, or within the viewshed of a building, site, district, structure or object, significant in American history, architecture, archeology, engineering or culture, that is listed or eligible for listing on the State or National Registers of Historic Places, or located in or on, or within the viewshed of an Indian Religious Site. Trileaf has learned your tribe has an interest in property located within this County.

Our client proposes to construct a 475-foot-tall (488-feet-overall) self-support telecommunications tower and associated equipment within a proposed 80-foot by 80-foot (6,400-square-foot) lease area. An approximately 12-foot-wide access easement is proposed to extend north from the north side of the proposed telecommunications compound into a proposed service vehicle turn-around, and then east approximately 83.4 feet to an existing access drive. Currently, the site is forested land. The form 620/621 submission packet can be accessed at the following link and is also attached (if so requested) for your review:

Link: https://trileaf.sharefile.com/d-s84cc883e6eb4da9a

Please let us know if you have any objections or comments on this project as soon as possible. Contact me at (314) 997-6111 or email m.okai@trileaf.com or tribal@trileaf.com if you have any questions. Thank you for your assistance in this regard.

Sincerely,

Mindi Okai

Mindi Okai
Tribal Consultation Manager

CITIZEN POTAWATOMI NATION

February 4, 2019

Re: TCNS # 180353, 180684 & 180995

Ms. Okai,

I have reviewed the project information provided. In addition, I have reviewed our historic records and modern maps for the area in question. The Citizen Potawatomi Nation THPO office has determined that the undertaking referenced in your letter will not impact any *known* Potawatomi sites.

There is always the possibility of inadvertent discoveries being made during construction. If any inadvertent discoveries of human remains or artifacts are made please cease all activities at the site and notify my office immediately.

Please feel free to contact me if you have any further questions.

Respectfully,

Kelli Mosteller, Ph.D.
Director/THPO
Citizen Potawatomi Nation
Cultural Heritage Center
1899 S. Gordon Cooper Dr.
Shawnee, OK 74801
Ph: (405) 878-5830

TRILEAF™
ENVIRONMENTAL • ARCHITECTURE • ENGINEERING
10845 Olive Boulevard, Suite 260, Saint Louis, Missouri 63141 • 314.997.6111 www.trileaf.com

December 21, 2018

Crow Creek Sioux Tribal Council
Ms. Bonnie McGhee
P.O. Box 50
Ft. Thompson, SD 57339

RE: **Pyramid Network Services – Moore Park – Trileaf Project #646371**
White Road, Bailey, Michigan 49303
Muskegon County, Grant Quadrangle (USGS)
Latitude: 43° 15' 45.6" N, Longitude: 85° 48' 27.7" W
TCNS# 180995

Dear Ms. McGhee:

This project was originally submitted to your tribe via TCNS on December 7, 2018; TCNS #180995. Trileaf Corporation is in the process of completing a NEPA Review at the above referenced property. Our investigation includes determining if the site is contained in, on, or within the viewshed of a building, site, district, structure or object, significant in American history, architecture, archeology, engineering or culture, that is listed or eligible for listing on the State or National Registers of Historic Places, or located in or on, or within the viewshed of an Indian Religious Site. Trileaf has learned your tribe has an interest in property located within this County.

Our client proposes to construct a 475-foot-tall (488-feet-overall) self-support telecommunications tower and associated equipment within a proposed 80-foot by 80-foot (6,400-square-foot) lease area. An approximately 12-foot-wide access easement is proposed to extend north from the north side of the proposed telecommunications compound into a proposed service vehicle turn-around, and then east approximately 83.4 feet to an existing access drive. Currently, the site is forested land. The form 620/621 submission packet can be accessed at the following link and is also attached (if so requested) for your review:

Link: https://trileaf.sharefile.com/d-s84cc883e6eb4da9a

Please let us know if you have any objections or comments on this project as soon as possible. Contact me at (314) 997-6111 or email m.okai@trileaf.com or tribal@trileaf.com if you have any questions. Thank you for your assistance in this regard.

Sincerely,

Mindi Okai

Mindi Okai
Tribal Consultation Manager

From: Montana Associates
To: Mindi Okai
Subject: TCNS Reviews
Date: Thursday, December 27, 2018 4:38:17 PM

The Crow Creek Sioux Tribe has reviewed TCNS 180564 180901 180907 180919 180991 181149 181150 180353 180684 180686 180995 181145 181146 181147

Thank-you for the necessary documentation for us to review your proposed projects. We have no issues with any historic properties within the APE that we have affiliation to. Please contact us in the event the ground disturbance inadvertently uncovers human remains and or archaeological/cultural material. Should any changes in the project be made please notify this office of the changes before further project planning continues.

Thank-you.

RE: Deployments of Antennas, Small Boxes and Macro Towers

Dear Applicant:

Please be advised that the failure to pay our review fees will result in litigation being filed against your company in the tribal court that has jurisdiction over our clients' interests and your failure to pay for our clients' work product.

This includes your deployment on this TCNS project which was reviewed by our client today.

Any questions, please contact Mr. Gary Montana, Senior Attorney, Montana & Associates, LLC. Office 1-715-597-6464 Fax 1-715-597-3508

Sincerely,

Montana & Associates, LLC

Montana & Associates LLC
N12923 North Prairie Rd
Osseo, WI 54758

TRILEAF™
ENVIRONMENTAL • ARCHITECTURE • ENGINEERING
10845 Olive Boulevard, Suite 260, Saint Louis, Missouri 63141 • 314.997.6111 www.trileaf.com

December 21, 2018

Eastern Shawnee Tribe of Oklahoma
Mr. Brett Barnes
70500 East 128 Road
Wyandotte, OK 74370

RE: **Pyramid Network Services – Moore Park – Trileaf Project #646371**
White Road, Bailey, Michigan 49303
Muskegon County, Grant Quadrangle (USGS)
Latitude: 43° 15' 45.6" N, Longitude: 85° 48' 27.7" W
TCNS# 180995

Dear Mr. Barnes:

This project was originally submitted to your tribe via TCNS on December 7, 2018; TCNS #180995. Trileaf Corporation is in the process of completing a NEPA Review at the above referenced property. Our investigation includes determining if the site is contained in, on, or within the viewshed of a building, site, district, structure or object, significant in American history, architecture, archeology, engineering or culture, that is listed or eligible for listing on the State or National Registers of Historic Places, or located in or on, or within the viewshed of an Indian Religious Site. Trileaf has learned your tribe has an interest in property located within this County.

Our client proposes to construct a 475-foot-tall (488-feet-overall) self-support telecommunications tower and associated equipment within a proposed 80-foot by 80-foot (6,400-square-foot) lease area. An approximately 12-foot-wide access easement is proposed to extend north from the north side of the proposed telecommunications compound into a proposed service vehicle turn-around, and then east approximately 83.4 feet to an existing access drive. Currently, the site is forested land. The form 620/621 submission packet can be accessed at the following link and is also attached (if so requested) for your review:

Link: https://trileaf.sharefile.com/d-s84cc883e6eb4da9a

Please let us know if you have any objections or comments on this project as soon as possible. Contact me at (314) 997-6111 or email m.okai@trileaf.com or tribal@trileaf.com if you have any questions. Thank you for your assistance in this regard.

Sincerely,

Mindi Okai

Mindi Okai
Tribal Consultation Manager

From: Kelly Nelson
To: Mindi Okai
Subject: TCNS# 180995
Date: Tuesday, January 15, 2019 10:35:47 AM

The Cultural Preservation Department of the Eastern Shawnee Tribe of Oklahoma (ESTO) has received the documentation for the referenced TCNS project. ESTO has reviewed the project in accordance with Section 106 of the National Historic Preservation Act (NHPA). Based on the information provided and a review of our records, we find that **No Historic Properties** of sacred and/or cultural significance to the Tribe will be impacted by this project. Therefore, ESTO has no objection to the project proceeding as described; however, please note that any future changes to this project may require additional consultation.

In accordance with the NHPA of 1966 (16 U.S.C. § 470-470w-6), federally funded, licensed, or permitted undertakings that are subject to the Section 106 review process must determine effects to significant historic properties. As clarified in Section 101(d)(6)(A-B), historic properties may have religious and/or cultural significance to Indian Tribes. Section 106 of NHPA requires Federal agencies to consider the effects of their actions on all significant historic properties (36 CFR Part 800) as does the National Environmental Policy Act of 1969 (43 U.S.C. § 4321-4347 and 40 CFR § 1501.7(a).

However, if during construction cultural objects or human remains are inadvertently discovered, please stop work immediately and contact the Cultural Preservation Department of the Eastern Shawnee Tribe of Oklahoma.

Neyiwa,

Kelly Nelson
TCNS Coordinator
Eastern Shawnee Tribe of Oklahoma
918-666-2435 ext. 1861

IMPORTANT NOTICE: This e-mail message is intended to be received only by persons entitled to receive the confidential information it may contain. E-mail messages from ESTOO.net may contain information that is confidential and legally privileged. Please do not read, copy, forward, or store this message unless you are an intended recipient of it. If you have received this message in error, please forward it to the sender and delete it completely from your computer system. [M704NQ]

TRILEAF™
ENVIRONMENTAL • ARCHITECTURE • ENGINEERING
10845 Olive Boulevard, Suite 260, Saint Louis, Missouri 63141 • 314.997.6111 www.trileaf.com

December 21, 2018

Fort Belknap Indian Community
Ms. Kolynn Plumage
656 Agency Main Street
Harlem, MT 59526

RE: **Pyramid Network Services – Moore Park – Trileaf Project #646371**
White Road, Bailey, Michigan 49303
Muskegon County, Grant Quadrangle (USGS)
Latitude: 43° 15' 45.6" N, Longitude: 85° 48' 27.7" W
TCNS# 180995

Dear Ms. Plumage:

This project was originally submitted to your tribe via TCNS on December 7, 2018; TCNS #180995. Trileaf Corporation is in the process of completing a NEPA Review at the above referenced property. Our investigation includes determining if the site is contained in, on, or within the viewshed of a building, site, district, structure or object, significant in American history, architecture, archeology, engineering or culture, that is listed or eligible for listing on the State or National Registers of Historic Places, or located in or on, or within the viewshed of an Indian Religious Site. Trileaf has learned your tribe has an interest in property located within this County.

Our client proposes to construct a 475-foot-tall (488-feet-overall) self-support telecommunications tower and associated equipment within a proposed 80-foot by 80-foot (6,400-square-foot) lease area. An approximately 12-foot-wide access easement is proposed to extend north from the north side of the proposed telecommunications compound into a proposed service vehicle turn-around, and then east approximately 83.4 feet to an existing access drive. Currently, the site is forested land. The form 620/621 submission packet can be accessed at the following link and is also attached (if so requested) for your review:

Link: https://trileaf.sharefile.com/d-s84cc883e6eb4da9a

Please let us know if you have any objections or comments on this project as soon as possible. Contact me at (314) 997-6111 or email m.okai@trileaf.com or tribal@trileaf.com if you have any questions. Thank you for your assistance in this regard.

Sincerely,

Mindi Okai

Mindi Okai
Tribal Consultation Manager

From: towernotifyinfo@fcc.gov
To: tribal
Cc: tcnsweekly@fcc.gov
Subject: Proposed Construction of Communications Facilities Notification of Final Contacts - Email ID #23573
Date: Thursday, February 28, 2019 8:01:23 AM

Verizon Wireless
Mindi L Okai
10845 Olive Blvd.
St. Louis, MO 63141

Dear Applicant:

This letter addresses the proposed communications facilities listed below that you have referred to the Federal Communications Commission (Commission) for purposes of contacting federally recognized Indian Tribes, including Alaska Native Villages (collectively Indian Tribes), and Native Hawaiian Organizations (NHOs), as specified by Section IV.G of the Nationwide Programmatic Agreement (NPA). Consistent with the procedures outlined in the Commission's Wireless Infrastructure Second Report and Order (1), we have contacted the Indian Tribes or NHOs identified in the attached Table for the projects listed in the attached Table. You referred these projects to us between 02/21/2019 and 02/28/2019. Our contact with these Tribal Nations or NHOs was sent on 02/28/2019.

Thus, as described in the Wireless Infrastructure Second Report and Order (2), if you or Commission staff do not receive a statement of interest regarding a particular project from any Tribe or NHO within 15 calendar days of 02/28/2019, your obligations under Section IV of the NPA with respect to these Tribal Nations or NHOs are complete. If a Tribal Nation or NHO responds that it has concerns about a historic property of traditional religious and cultural significance that may be affected by the proposed construction within the 15 calendar day period, the Applicant must involve it in the review as set forth in the NPA, and may not begin construction until the process set forth in the NPA is completed.

You are reminded that Section IX of the NPA imposes independent obligations on an Applicant when a previously unidentified site that may be a historic property, including an archeological property, is discovered during construction or after the completion of review. In such instances, the Applicant must cease construction and promptly notify, among others, any potentially affected Tribal Nation or NHO. A Tribal Nation's or NHO's failure to express interest in participating in pre-construction review of an undertaking does not necessarily mean it is not interested in archeological properties or human remains that may inadvertently be discovered during construction. Hence, an Applicant is still required to notify any potentially affected Tribal Nation or NHO of any such finds pursuant to Section IX or other applicable law.

Sincerely,
Jill Springer
Federal Preservation Officer
Federal Communications Commission
jill.springer@fcc.gov

---

1) See Accelerating Wireless Broadband Deployment by Removing Barriers to Infrastructure Deployment, Second Report and Order, FCC 18-30 (Mar. 30, 2018) (Wireless Infrastructure Second Report and Order).
2) See id. at paras. 111-112.

LIST OF PROPOSED COMMUNICATIONS TOWERS

TCNS# 180715 Referred Date: 02/27/2019 Location: 70 Retachez Lane, San Isidro, TX
Detailed Description of Project: Legal Description: No Township Found.
Tribe Name: Apache Tribe of Oklahoma
Tribe Name: Mescalero Apache Tribe

Detailed Description of Project: Legal Description: No Township Found.
Project Description: Project is a collocation with NO Ground disturbance.

Tribe Name: Delaware Nation
Tribe Name: Delaware Tribe of Indians of Oklahoma
Tribe Name: Keweenaw Bay Indian Community
Tribe Name: Red Cliff Band of Lake Superior Chippewa Indians of Wisconsin
Tribe Name: Shawnee Tribe
Tribe Name: Shinnecock Nation
Tribe Name: Wyandotte Nation

TCNS# 180995 Referred Date: 02/27/2019 Location: White Road, Bailey, MI
Detailed Description of Project: Legal Description: S13 T10N R13W

Tribe Name: Fort Belknap Indian Community
Tribe Name: Ho-Chunk Nation
Tribe Name: Huron Potawatomi
Tribe Name: Keweenaw Bay Indian Community
Tribe Name: Menominee Indian Tribe of Wisconsin
Tribe Name: Otoe-Missouria Tribe of Indians
Tribe Name: Ottawa Tribe of Oklahoma
Tribe Name: Red Cliff Band of Lake Superior Chippewa Indians of Wisconsin
Tribe Name: Shawnee Tribe
Tribe Name: Winnebago Tribe of Nebraska
Tribe Name: Wyandotte Nation

TCNS# 180904 Referred Date: 02/27/2019 Location: County Road 2325, Milo, MO
Detailed Description of Project: Legal Description: S4 T34N R30W

Tribe Name: Otoe-Missouria Tribe of Indians
Tribe Name: Red Cliff Band of Lake Superior Chippewa Indians of Wisconsin
Tribe Name: Seneca-Cayuga Nation
Tribe Name: Winnebago Tribe of Nebraska
Tribe Name: Wyandotte Nation
Tribe Name: Absentee-Shawnee Tribe of Indians of Oklahoma
Tribe Name: Crow Tribe
Tribe Name: Flandreau Santee Sioux Tribe
Tribe Name: Ho-Chunk Nation
Tribe Name: Iowa Tribe of Kansas & Nebraska
Tribe Name: Iowa Tribe of Oklahoma
Tribe Name: Kaw Nation

TCNS# 180991 Referred Date: 02/27/2019 Location: 823 Mt. Holly-Huntersville Rd., Charlotte, NC
Detailed Description of Project: Legal Description: No Township Found.

Tribe Name: Flandreau Santee Sioux Tribe
Tribe Name: Kialegee Tribal Town
Tribe Name: Shawnee Tribe

TCNS# 181147 Referred Date: 02/27/2019 Location: 288 Isabella Street, Drakes Branch, VA
Detailed Description of Project: Legal Description: No Township Found.
Project Description: Project is a collocation with less than 500 square feet of ground disturbance in already disturbed ground.

Tribe Name: Chickahominy Indian Tribe
Tribe Name: Cultural Heritage Partners
Tribe Name: Delaware Nation
Tribe Name: Flandreau Santee Sioux Tribe
Tribe Name: Monacan Nation
Tribe Name: Nansemond Indian Tribe
Tribe Name: Shawnee Tribe

TRILEAF™
ENVIRONMENTAL • ARCHITECTURE • ENGINEERING
10845 Olive Boulevard, Suite 260, Saint Louis, Missouri 63141 • 314.997.6111 www.trileaf.com

December 21, 2018

Ho-Chunk Nation
Mr. William Quackenbush
P.O. Box 667
Black River Falls, WI 54615

RE: **Pyramid Network Services – Moore Park – Trileaf Project #646371**
White Road, Bailey, Michigan 49303
Muskegon County, Grant Quadrangle (USGS)
Latitude: 43° 15' 45.6" N, Longitude: 85° 48' 27.7" W
TCNS# 180995

Dear Mr. Quackenbush:

This project was originally submitted to your tribe via TCNS on December 7, 2018; TCNS #180995. Trileaf Corporation is in the process of completing a NEPA Review at the above referenced property. Our investigation includes determining if the site is contained in, on, or within the viewshed of a building, site, district, structure or object, significant in American history, architecture, archeology, engineering or culture, that is listed or eligible for listing on the State or National Registers of Historic Places, or located in or on, or within the viewshed of an Indian Religious Site. Trileaf has learned your tribe has an interest in property located within this County.

Our client proposes to construct a 475-foot-tall (488-feet-overall) self-support telecommunications tower and associated equipment within a proposed 80-foot by 80-foot (6,400-square-foot) lease area. An approximately 12-foot-wide access easement is proposed to extend north from the north side of the proposed telecommunications compound into a proposed service vehicle turn-around, and then east approximately 83.4 feet to an existing access drive. Currently, the site is forested land. The form 620/621 submission packet can be accessed at the following link and is also attached (if so requested) for your review:

Link: https://trileaf.sharefile.com/d-s84cc883e6eb4da9a

Please let us know if you have any objections or comments on this project as soon as possible. Contact me at (314) 997-6111 or email m.okai@trileaf.com or tribal@trileaf.com if you have any questions. Thank you for your assistance in this regard.

Sincerely,

Mindi Okai

Mindi Okai
Tribal Consultation Manager

TRILEAF™
ENVIRONMENTAL • ARCHITECTURE • ENGINEERING
10845 Olive Boulevard, Suite 260, Saint Louis, Missouri 63141 • 314.997.6111 www.trileaf.com

December 21, 2018

Huron Potawatomi, Inc
Mr. John Rodwan
1485 Mno-Bmadzewen
Fulton, MI 49052

RE: **Pyramid Network Services – Moore Park – Trileaf Project #646371**
White Road, Bailey, Michigan 49303
Muskegon County, Grant Quadrangle (USGS)
Latitude: 43° 15' 45.6" N, Longitude: 85° 48' 27.7" W
TCNS# 180995

Dear Mr. Rodwan:

This project was originally submitted to your tribe via TCNS on December 7, 2018; TCNS #180995. Trileaf Corporation is in the process of completing a NEPA Review at the above referenced property. Our investigation includes determining if the site is contained in, on, or within the viewshed of a building, site, district, structure or object, significant in American history, architecture, archeology, engineering or culture, that is listed or eligible for listing on the State or National Registers of Historic Places, or located in or on, or within the viewshed of an Indian Religious Site. Trileaf has learned your tribe has an interest in property located within this County.

Our client proposes to construct a 475-foot-tall (488-feet-overall) self-support telecommunications tower and associated equipment within a proposed 80-foot by 80-foot (6,400-square-foot) lease area. An approximately 12-foot-wide access easement is proposed to extend north from the north side of the proposed telecommunications compound into a proposed service vehicle turn-around, and then east approximately 83.4 feet to an existing access drive. Currently, the site is forested land. The form 620/621 submission packet can be accessed at the following link and is also attached (if so requested) for your review:

Link: https://trileaf.sharefile.com/d-s84cc883e6eb4da9a

Please let us know if you have any objections or comments on this project as soon as possible. Contact me at (314) 997-6111 or email m.okai@trileaf.com or tribal@trileaf.com if you have any questions. Thank you for your assistance in this regard.

Sincerely,

Mindi Okai

Mindi Okai
Tribal Consultation Manager

TRILEAF™
ENVIRONMENTAL • ARCHITECTURE • ENGINEERING
10845 Olive Boulevard, Suite 260, Saint Louis, Missouri 63141 • 314.997.6111 www.trileaf.com

December 21, 2018

Keweenaw Bay Indian Community
Mr. Gary Loonsfoot Jr.
16429 Beartown Road
Baraga, MI 49908

RE: **Pyramid Network Services – Moore Park – Trileaf Project #646371**
White Road, Bailey, Michigan 49303
Muskegon County, Grant Quadrangle (USGS)
Latitude: 43° 15' 45.6" N, Longitude: 85° 48' 27.7" W
TCNS# 180995

Dear Mr. Loonsfoot Jr.:

This project was originally submitted to your tribe via TCNS on December 7, 2018; TCNS #180995. Trileaf Corporation is in the process of completing a NEPA Review at the above referenced property. Our investigation includes determining if the site is contained in, on, or within the viewshed of a building, site, district, structure or object, significant in American history, architecture, archeology, engineering or culture, that is listed or eligible for listing on the State or National Registers of Historic Places, or located in or on, or within the viewshed of an Indian Religious Site. Trileaf has learned your tribe has an interest in property located within this County.

Our client proposes to construct a 475-foot-tall (488-feet-overall) self-support telecommunications tower and associated equipment within a proposed 80-foot by 80-foot (6,400-square-foot) lease area. An approximately 12-foot-wide access easement is proposed to extend north from the north side of the proposed telecommunications compound into a proposed service vehicle turn-around, and then east approximately 83.4 feet to an existing access drive. Currently, the site is forested land. The form 620/621 submission packet can be accessed at the following link and is also attached (if so requested) for your review:

Link: https://trileaf.sharefile.com/d-s84cc883e6eb4da9a

Please let us know if you have any objections or comments on this project as soon as possible. Contact me at (314) 997-6111 or email m.okai@trileaf.com or tribal@trileaf.com if you have any questions. Thank you for your assistance in this regard.

Sincerely,

Mindi Okai

Mindi Okai
Tribal Consultation Manager

TRILEAF™
ENVIRONMENTAL • ARCHITECTURE • ENGINEERING
10845 Olive Boulevard, Suite 260, Saint Louis, Missouri 63141 • 314.997.6111 www.trileaf.com

December 21, 2018

Lac du Flambeau Band of Lake Superior Chippewa Indians
Ms. Melinda Young
Tribal Historic Preservation Office
P.O. Box 67
Lac du Flambeau, WI 54538

RE: **Pyramid Network Services – Moore Park – Trileaf Project #646371**
White Road, Bailey, Michigan 49303
Muskegon County, Grant Quadrangle (USGS)
Latitude: 43° 15' 45.6" N, Longitude: 85° 48' 27.7" W
TCNS# 180995

Dear Ms. Young:

This project was originally submitted to your tribe via TCNS on December 7, 2018; TCNS #180995. Trileaf Corporation is in the process of completing a NEPA Review at the above referenced property. Our investigation includes determining if the site is contained in, on, or within the viewshed of a building, site, district, structure or object, significant in American history, architecture, archeology, engineering or culture, that is listed or eligible for listing on the State or National Registers of Historic Places, or located in or on, or within the viewshed of an Indian Religious Site. Trileaf has learned your tribe has an interest in property located within this County.

Our client proposes to construct a 475-foot-tall (488-feet-overall) self-support telecommunications tower and associated equipment within a proposed 80-foot by 80-foot (6,400-square-foot) lease area. An approximately 12-foot-wide access easement is proposed to extend north from the north side of the proposed telecommunications compound into a proposed service vehicle turn-around, and then east approximately 83.4 feet to an existing access drive. Currently, the site is forested land. The form 620/621 submission packet can be accessed at the following link and is also attached (if so requested) for your review:

Link: https://trileaf.sharefile.com/d-s84cc883e6eb4da9a

Please let us know if you have any objections or comments on this project as soon as possible. Contact me at (314) 997-6111 or email m.okai@trileaf.com or tribal@trileaf.com if you have any questions. Thank you for your assistance in this regard.

Sincerely,

Mindi Okai

Mindi Okai
Tribal Consultation Manager

From: ldfthpo
To: Mindi Okai
Subject: RE: TCNS # 180995 - Lac du Flambeau - For Review
Date: Wednesday, January 9, 2019 10:23:56 AM
Attachments: image002.png

CAUTION
This email originated from outside of the organization. Do not click links or open attachments unless you recognize the sender and know the content is safe.

Ms. Okai,

The Lac du Flambeau Tribal Historic Preservation Office (THPO) received your requests for comments or interest concerning the National Historic Preservation Act, Section 106 request for review and comment to the effect on historic and cultural sites within the proposed above referenced project area.

The Lac du Flambeau Tribe does not release any cultural/historical data to any agency outside of the Tribe. We will, however research and check our databases, maps, and any other pertinent inventory records with regards to said project.

Under the authority of Section 106 of the National Historic Preservation Act of 1966, as amended, we have reviewed the above-cited undertaking at the location noted above. Based on the information provided for our review, it is the opinion of the Lac du Flambeau THPO that the project has **No Effect** to sites of historic significance and/or the direct APE.

This letter evidences the FCC's compliance with 36 CFR § 800.4 “Identification of historic properties” and 36 CFR § 800.5 “Assessment of adverse effects”, and the fulfillment of the FCC’s responsibility to notify the THPO, as a consulting party in the Section 106 process, under 36 CFR § 800.5(c) “Consulting party review”.
Referencing above mentioned project we have determined that we have no objections to the project at this time we have now completed the necessary paper work and research for site documentation and will keep the project open until such time it ends. If the scope of work changes in any way, or if artifacts or human remains are discovered please notify Lac du Flambeau immediately.

Sarah Schuman,
Assistant Tribal Historic Preservation Officer
For
Melinda Young,
Tribal Historic Preservation Officer
P.O. Box 67
Lac du Flambeau, WI 54538
Phone: 715-588-4381
Cell: 715-439-3867
www.ldftribe.com

TRILEAF™
ENVIRONMENTAL • ARCHITECTURE • ENGINEERING
10845 Olive Boulevard, Suite 260, Saint Louis, Missouri 63141 • 314.997.6111 www.trileaf.com

December 21, 2018

Lac Vieux Desert Band of Lake Superior Chippewa Indians
Ms. Daisy McGeshick
P.O. Box 249
Watersmeet, MI 49969

RE: **Pyramid Network Services – Moore Park – Trileaf Project #646371**
White Road, Bailey, Michigan 49303
Muskegon County, Grant Quadrangle (USGS)
Latitude: 43° 15' 45.6" N, Longitude: 85° 48' 27.7" W
TCNS# 180995

Dear Ms. McGeshick:

This project was originally submitted to your tribe via TCNS on December 7, 2018; TCNS #180995. Trileaf Corporation is in the process of completing a NEPA Review at the above referenced property. Our investigation includes determining if the site is contained in, on, or within the viewshed of a building, site, district, structure or object, significant in American history, architecture, archeology, engineering or culture, that is listed or eligible for listing on the State or National Registers of Historic Places, or located in or on, or within the viewshed of an Indian Religious Site. Trileaf has learned your tribe has an interest in property located within this County.

Our client proposes to construct a 475-foot-tall (488-feet-overall) self-support telecommunications tower and associated equipment within a proposed 80-foot by 80-foot (6,400-square-foot) lease area. An approximately 12-foot-wide access easement is proposed to extend north from the north side of the proposed telecommunications compound into a proposed service vehicle turn-around, and then east approximately 83.4 feet to an existing access drive. Currently, the site is forested land. The form 620/621 submission packet can be accessed at the following link and is also attached (if so requested) for your review:

Link: https://trileaf.sharefile.com/d-s84cc883e6eb4da9a

Please let us know if you have any objections or comments on this project as soon as possible. Contact me at (314) 997-6111 or email m.okai@trileaf.com or tribal@trileaf.com if you have any questions. Thank you for your assistance in this regard.

Sincerely,

Mindi Okai

Mindi Okai
Tribal Consultation Manager

From: towernotifyinfo@fcc.gov
To: tribal
Cc: tcnsweekly@fcc.gov
Subject: Proposed Construction of Communications Facilities Notification of Final Contacts - Email ID #23601
Date: Thursday, March 7, 2019 8:02:19 AM

Verizon Wireless
Mindi L Okai
10845 Olive Blvd.
St. Louis, MO 63141

Dear Applicant:

This letter addresses the proposed communications facilities listed below that you have referred to the Federal Communications Commission (Commission) for purposes of contacting federally recognized Indian Tribes, including Alaska Native Villages (collectively Indian Tribes), and Native Hawaiian Organizations (NHOs), as specified by Section IV.G of the Nationwide Programmatic Agreement (NPA). Consistent with the procedures outlined in the Commission's Wireless Infrastructure Second Report and Order (1), we have contacted the Indian Tribes or NHOs identified in the attached Table for the projects listed in the attached Table. You referred these projects to us between 02/28/2019 and 03/07/2019. Our contact with these Tribal Nations or NHOs was sent on 03/07/2019.

Thus, as described in the Wireless Infrastructure Second Report and Order (2), if you or Commission staff do not receive a statement of interest regarding a particular project from any Tribe or NHO within 15 calendar days of 03/07/2019, your obligations under Section IV of the NPA with respect to these Tribal Nations or NHOs are complete. If a Tribal Nation or NHO responds that it has concerns about a historic property of traditional religious and cultural significance that may be affected by the proposed construction within the 15 calendar day period, the Applicant must involve it in the review as set forth in the NPA, and may not begin construction until the process set forth in the NPA is completed.

You are reminded that Section IX of the NPA imposes independent obligations on an Applicant when a previously unidentified site that may be a historic property, including an archeological property, is discovered during construction or after the completion of review. In such instances, the Applicant must cease construction and promptly notify, among others, any potentially affected Tribal Nation or NHO. A Tribal Nation's or NHO's failure to express interest in participating in pre-construction review of an undertaking does not necessarily mean it is not interested in archeological properties or human remains that may inadvertently be discovered during construction. Hence, an Applicant is still required to notify any potentially affected Tribal Nation or NHO of any such finds pursuant to Section IX or other applicable law.

Sincerely,
Jill Springer
Federal Preservation Officer
Federal Communications Commission
jill.springer@fcc.gov

---

1) See Accelerating Wireless Broadband Deployment by Removing Barriers to Infrastructure Deployment, Second Report and Order, FCC 18-30 (Mar. 30, 2018) (Wireless Infrastructure Second Report and Order).
2) See id. at paras. 111-112.

LIST OF PROPOSED COMMUNICATIONS TOWERS

TCNS# 180151 Referred Date: 03/06/2019 Location: 7108 FM 71, Commerce, TX
Detailed Description of Project: Legal Description: No Township Found.
Tribe Name: Wichita and Affiliated Tribes
Tribe Name: Kiowa Indian Tribe

Detailed Description of Project: Legal Description: No Township Found. Project is a collocation with no ground disturbance.
Tribe Name: Manzanita Band of Mission Indians

TCNS# 181153 Referred Date: 03/07/2019 Location: 300 Cornett Road, Naples, TX
Detailed Description of Project: Legal Description: No Township Found.
Tribe Name: Muscogee (Creek) Nation

TCNS# 180877 Referred Date: 03/06/2019 Location: 6339 East Greenway Road, Phoenix, AZ
Detailed Description of Project: Crown Castle proposes to install new antennas at 44 feet centerline on an existing 70.5-foot monopole tower. Ground-based equipment is proposed to be installed within a new 13-foot by 11.5-foot lease area within an existing trash enclosure.
Tribe Name: Kiowa Indian Tribe

TCNS# 180883 Referred Date: 03/06/2019 Location: 106th Avenue SE & Lake Washington Boulevard SE, Belleview, WA
Detailed Description of Project: Relocate 50' tall tower and install new ground-based equipment in 50x100' lease area. Access and utilities are proposed to be provided via a new easement of varying width extending generally northeast to 106th Avenue SE.
Tribe Name: Blackfeet Nation

TCNS# 180901 Referred Date: 03/06/2019 Location: 1620 Kearney Street, Port Huron, MI
Detailed Description of Project: Legal Description: S3 T6N R17E
Tribe Name: Sisseton-Wahpeton Oyate of the Lake Traverse Reservation
Tribe Name: Red Lake Band of Chippewa Indians of Minnesota
Tribe Name: Lac Vieux Desert Band of Lake Superior Chippewa Indians

TCNS# 180684 Referred Date: 03/06/2019 Location: 12161 SE 40th Road, Faucett, MO
Detailed Description of Project: Legal Description: S26 T56N R35W
Tribe Name: Sisseton-Wahpeton Oyate of the Lake Traverse Reservation

TCNS# 180910 Referred Date: 03/06/2019 Location: 24010 County Street 2670, Gracemont, OK
Detailed Description of Project: Legal Description: S34 T9N R10W
Tribe Name: Sisseton-Wahpeton Oyate of the Lake Traverse Reservation
Tribe Name: Wichita and Affiliated Tribes
Tribe Name: Seminole Nation of Oklahoma
Tribe Name: Kiowa Indian Tribe

TCNS# 180667 Referred Date: 03/06/2019 Location: 8752 Northwest CR 4470, Blooming Grove, TX
Detailed Description of Project: Legal Description: No Township Found.
Tribe Name: Kiowa Indian Tribe
Tribe Name: Wichita and Affiliated Tribes
Tribe Name: Seminole Nation of Oklahoma

TCNS# 180686 Referred Date: 03/06/2019 Location: South Elm Street, Charleston, MO
Detailed Description of Project: Legal Description: S7 T26N R16E
Tribe Name: Sisseton-Wahpeton Oyate of the Lake Traverse Reservation

TCNS# 180715 Referred Date: 03/06/2019 Location: 70 Retachez Lane, San Isidro, TX
Detailed Description of Project: Legal Description: No Township Found.
Tribe Name: Kiowa Indian Tribe
Tribe Name: Wichita and Affiliated Tribes

TCNS# 180689 Referred Date: 03/06/2019 Location: 2540 S International Blvd, Progreso Lakes, TX
Detailed Description of Project: Legal Description: No Township Found.

From: towernotifyinfo@fcc.gov
To: tribal
Cc: tcns.fccarchive@fcc.gov
Subject: Reply to Proposed Tower Structure (Notification ID: 180995) - Email ID #6121321
Date: Wednesday, December 5, 2018 9:22:12 AM

Dear Mindi L Okai,

Thank you for using the Federal Communications Commission's (FCC) Tower Construction Notification System (TCNS). The purpose of this email is to inform you that an authorized user of the TCNS has replied to a proposed tower construction notification that you had submitted through the TCNS.

The following message has been sent to you from Historic Preservation Director Jonnie J Sam II of the Little River Band of Ottawa Indians in reference to Notification ID #180995:

I have received your notification requesting a determination as to whether or not the proposed telecommunications tower will affect Indian religious, historic or cultural sites. This is the Tribe's formal answer.

Referencing the notification, I can reply by stating that the site listed is located in a region of the state of Michigan that Little River Band of Ottawa Indians did occupy significantly.

However, after a careful review of our information and due to the nature of the project the Little River Band of Ottawa Indians has determined there that this project will not affect any religious, cultural or historic sites of which we are currently aware.

The Tribe would, however, appreciate work stopping and being contacted should there be something cultural or historic discovered.

Signed

Jonnie Sam II, Director
Little River Band of Ottawa Indians
Historic Preservation Department

For your convenience, the information you submitted for this notification is detailed below.

Notification Received: 12/04/2018
Notification ID: 180995
Tower Owner Individual or Entity Name: Pyramid Network Services
Consultant Name: Mindi L Okai
Street Address: 10845 Olive Blvd.
Suite 260
City: St. Louis
State: MISSOURI
Zip Code: 63141

Phone: 314-997-6111
Email: tribal@trileaf.com

Structure Type: LTOWER - Lattice Tower
Latitude: 43 deg 15 min 45.6 sec N
Longitude: 85 deg 48 min 27.7 sec W
Location Description: White Road
City: Bailey
State: MICHIGAN
County: MUSKEGON

Detailed Description of Project: Legal Description: S13 T10N R13W
Ground Elevation: 264.6 meters
Support Structure: 144.8 meters above ground level
Overall Structure: 148.7 meters above ground level
Overall Height AMSL: 413.3 meters above mean sea level

TRILEAF™
ENVIRONMENTAL • ARCHITECTURE • ENGINEERING
10845 Olive Boulevard, Suite 260, Saint Louis, Missouri 63141 • 314.997.6111 www.trileaf.com

December 21, 2018

Menominee Indian Tribe of Wisconsin
Mr. David Grignon
P.O. Box 910
Keshena, WI 54135

RE: **Pyramid Network Services – Moore Park – Trileaf Project #646371**
White Road, Bailey, Michigan 49303
Muskegon County, Grant Quadrangle (USGS)
Latitude: 43° 15' 45.6" N, Longitude: 85° 48' 27.7" W
TCNS# 180995

Dear Mr. Grignon:

This project was originally submitted to your tribe via TCNS on December 7, 2018; TCNS #180995. Trileaf Corporation is in the process of completing a NEPA Review at the above referenced property. Our investigation includes determining if the site is contained in, on, or within the viewshed of a building, site, district, structure or object, significant in American history, architecture, archeology, engineering or culture, that is listed or eligible for listing on the State or National Registers of Historic Places, or located in or on, or within the viewshed of an Indian Religious Site. Trileaf has learned your tribe has an interest in property located within this County.

Our client proposes to construct a 475-foot-tall (488-feet-overall) self-support telecommunications tower and associated equipment within a proposed 80-foot by 80-foot (6,400-square-foot) lease area. An approximately 12-foot-wide access easement is proposed to extend north from the north side of the proposed telecommunications compound into a proposed service vehicle turn-around, and then east approximately 83.4 feet to an existing access drive. Currently, the site is forested land. The form 620/621 submission packet can be accessed at the following link and is also attached (if so requested) for your review:

Link: https://trileaf.sharefile.com/d-s84cc883e6eb4da9a

Please let us know if you have any objections or comments on this project as soon as possible. Contact me at (314) 997-6111 or email m.okai@trileaf.com or tribal@trileaf.com if you have any questions. Thank you for your assistance in this regard.

Sincerely,

Mindi Okai

Mindi Okai
Tribal Consultation Manager

TRILEAF™
ENVIRONMENTAL • ARCHITECTURE • ENGINEERING
10845 Olive Boulevard, Suite 260, Saint Louis, Missouri 63141 • 314.997.6111 www.trileaf.com

December 21, 2018

Miami Tribe of Oklahoma
Ms. Diane Hunter
P.O. Box 1326
Miami, OK 74355

RE: **Pyramid Network Services – Moore Park – Trileaf Project #646371**
White Road, Bailey, Michigan 49303
Muskegon County, Grant Quadrangle (USGS)
Latitude: 43° 15' 45.6" N, Longitude: 85° 48' 27.7" W
TCNS# 180995

Dear Ms. Hunter:

This project was originally submitted to your tribe via TCNS on December 7, 2018; TCNS #180995. Trileaf Corporation is in the process of completing a NEPA Review at the above referenced property. Our investigation includes determining if the site is contained in, on, or within the viewshed of a building, site, district, structure or object, significant in American history, architecture, archeology, engineering or culture, that is listed or eligible for listing on the State or National Registers of Historic Places, or located in or on, or within the viewshed of an Indian Religious Site. Trileaf has learned your tribe has an interest in property located within this County.

Our client proposes to construct a 475-foot-tall (488-feet-overall) self-support telecommunications tower and associated equipment within a proposed 80-foot by 80-foot (6,400-square-foot) lease area. An approximately 12-foot-wide access easement is proposed to extend north from the north side of the proposed telecommunications compound into a proposed service vehicle turn-around, and then east approximately 83.4 feet to an existing access drive. Currently, the site is forested land. The form 620/621 submission packet can be accessed at the following link and is also attached (if so requested) for your review:

Link: https://trileaf.sharefile.com/d-s84cc883e6eb4da9a

Please let us know if you have any objections or comments on this project as soon as possible. Contact me at (314) 997-6111 or email m.okai@trileaf.com or tribal@trileaf.com if you have any questions. Thank you for your assistance in this regard.

Sincerely,

Mindi Okai

Mindi Okai
Tribal Consultation Manager

From:	Scott Willard
To:	Mindi Okai
Subject:	TCNS responses
Date:	Wednesday, January 16, 2019 9:58:41 AM
Attachments:	Screen Shot 2018-05-31 at 8.40.18 AM.png

Greetings Mindi,

Below is our response for the listed TCNS projects. If you have any questions, please let me know.

Thank you,

Scott Willard
Second Councilperson
Assistant Cultural Resources Officer
Emergency Manager
swillard@miamination.com
(918) 541-2178 (office)
(417) 317-3465 (cell)

Re: TCNS 180919 181150 180564 180901 180419 180576
180710 180995 180686 180684 180353 181360
180679 181361 180933 181419 180422 181377
181159 181424 181520 181593

The Miami Tribe of Oklahoma is satisfied with efforts conducted to be sure that no Miami historic properties or other Miami cultural resources will likely be adversely affected by construction and use of this tower. The Miami Tribe of Oklahoma is not currently aware of any specific Miami cultural or historic sites in this project area. We therefore offer no objection to the proposed construction.

Because this tower lies in the homelands of the Miami, in the event that archaeological materials, including human remains, are discovered during construction or later ground-disturbing activities at this location, please re-open consultation at that time by contacting our THPO, Diane Hunter, at dhunter@miamination.com. Similarly, if plans are considered to

expand or modify this tower and cause additional ground disturbance in the future, please let us know. Please forward the Tribe's concerns regarding any such future work and unanticipated discoveries, as well as our contact information, to the appropriate parties.

We urge everyone involved with cell tower development to construct and maintain their projects in keeping with best practices for minimizing environmental impact - particularly on species, such as birds and bats, who might incur negative impacts from cell tower development and use. Please also re-vegetate with species native to the area.

We appreciate your efforts to consult with us.

Regards,

Scott Willard for
Diane Hunter, THPO
Miami Tribe of Oklahoma

TRILEAF™
ENVIRONMENTAL • ARCHITECTURE • ENGINEERING
10845 Olive Boulevard, Suite 260, Saint Louis, Missouri 63141 • 314.997.6111 www.trileaf.com

December 21, 2018

Northern Arapaho Tribe
Ms. Yufna Soldier Wolf
P.O. Box 67
St. Stephens, WY 82524

RE: **Pyramid Network Services – Moore Park – Trileaf Project #646371**
White Road, Bailey, Michigan 49303
Muskegon County, Grant Quadrangle (USGS)
Latitude: 43° 15' 45.6" N, Longitude: 85° 48' 27.7" W
TCNS# 180995

Dear Ms. Soldier Wolf:

This project was originally submitted to your tribe via TCNS on December 7, 2018; TCNS #180995. Trileaf Corporation is in the process of completing a NEPA Review at the above referenced property. Our investigation includes determining if the site is contained in, on, or within the viewshed of a building, site, district, structure or object, significant in American history, architecture, archeology, engineering or culture, that is listed or eligible for listing on the State or National Registers of Historic Places, or located in or on, or within the viewshed of an Indian Religious Site. Trileaf has learned your tribe has an interest in property located within this County.

Our client proposes to construct a 475-foot-tall (488-feet-overall) self-support telecommunications tower and associated equipment within a proposed 80-foot by 80-foot (6,400-square-foot) lease area. An approximately 12-foot-wide access easement is proposed to extend north from the north side of the proposed telecommunications compound into a proposed service vehicle turn-around, and then east approximately 83.4 feet to an existing access drive. Currently, the site is forested land. The form 620/621 submission packet can be accessed at the following link and is also attached (if so requested) for your review:

Link: https://trileaf.sharefile.com/d-s84cc883e6eb4da9a

Please let us know if you have any objections or comments on this project as soon as possible. Contact me at (314) 997-6111 or email m.okai@trileaf.com or tribal@trileaf.com if you have any questions. Thank you for your assistance in this regard.

Sincerely,

Mindi Okai

Mindi Okai
Tribal Consultation Manager

Hinon'einino'

Northern Arapaho Tribe

TRIBAL HISTORIC PRESERVATION OFFICE

P.O. Box 67 • St. Stephens, Wyoming 82524 • PH: 307.856.1628

Date:	1/14/2019
Environmental Company:	TRILEAF
Contact:	Mindi Okai
Email Address:	m.okai@trileaf.com
Address:	10845 Olive Boulevard, Suite 260 Saint Louis, Missouri 63141
Telephone:	P: (314) 997-6111 F: (314) 997-8066

TCNS:	180995
Site Name:	Moore Park
Company Name:	Pyramid Network Services
New Construction:	Yes-Self Support Tower
Collocation:	No
Building Type for Collocation:	N/A
Tower Height:	475'
Overall Height:	488'
Location:	N 43-15-45.6 W 085-48-27.7
Address:	White Rd., Bailey, Muskegon County, MI

The Northern Arapaho THPO has reviewed your Consultation Request under the National Environmental Protection Act and National Historic Preservation Act, Section 106 process regarding the proposed project and offers the following response:

No Historic Properties in the Direct or Visual APE

Our office has come to this determination with drawing conclusions from the report, ethnographic, previous survey search from SHPO and maps depicting province of sites in regards to APE and Visual. There are no cultural resources and no eligible historic properties within the APE. Currently there are no properties of religious and cultural significance to the Northern Arapaho that are within the area of potential effect. However with any new projects ground disturbance we do ask that if during excavation, traditional cultural properties, rock features, or human remains are found, we request that we be contacted and a report provided.

Thank you for consulting with the Northern Arapaho Tribe and providing the cultural resource inventory report.

Sincerely,

Pejuta Villa

Pejuta Villa
N.A.T.H.P.O. Cultural Resource Specialist
pejutathpo@gmail.com

TRILEAF™
ENVIRONMENTAL • ARCHITECTURE • ENGINEERING
10845 Olive Boulevard, Suite 260, Saint Louis, Missouri 63141 • 314.997.6111 www.trileaf.com

December 21, 2018

Otoe-Missouria Tribe of Indians
Ms. Elsie Whitehorn
8151 Highway 177
Red Rock, OK 74651

RE: **Pyramid Network Services – Moore Park – Trileaf Project #646371**
White Road, Bailey, Michigan 49303
Muskegon County, Grant Quadrangle (USGS)
Latitude: 43° 15' 45.6" N, Longitude: 85° 48' 27.7" W
TCNS# 180995

Dear Ms. Whitehorn:

This project was originally submitted to your tribe via TCNS on December 7, 2018; TCNS #180995. Trileaf Corporation is in the process of completing a NEPA Review at the above referenced property. Our investigation includes determining if the site is contained in, on, or within the viewshed of a building, site, district, structure or object, significant in American history, architecture, archeology, engineering or culture, that is listed or eligible for listing on the State or National Registers of Historic Places, or located in or on, or within the viewshed of an Indian Religious Site. Trileaf has learned your tribe has an interest in property located within this County.

Our client proposes to construct a 475-foot-tall (488-feet-overall) self-support telecommunications tower and associated equipment within a proposed 80-foot by 80-foot (6,400-square-foot) lease area. An approximately 12-foot-wide access easement is proposed to extend north from the north side of the proposed telecommunications compound into a proposed service vehicle turn-around, and then east approximately 83.4 feet to an existing access drive. Currently, the site is forested land. The form 620/621 submission packet can be accessed at the following link and is also attached (if so requested) for your review:

Link: https://trileaf.sharefile.com/d-s84cc883e6eb4da9a

Please let us know if you have any objections or comments on this project as soon as possible. Contact me at (314) 997-6111 or email m.okai@trileaf.com or tribal@trileaf.com if you have any questions. Thank you for your assistance in this regard.

Sincerely,

Mindi Okai

Mindi Okai
Tribal Consultation Manager

TRILEAF™
ENVIRONMENTAL • ARCHITECTURE • ENGINEERING
10845 Olive Boulevard, Suite 260, Saint Louis, Missouri 63141 • 314.997.6111 www.trileaf.com

December 21, 2018

Ottawa Tribe of Oklahoma
Ms. Cheryl Stafford
P.O. Box 110
Miami, OK 74355

RE: **Pyramid Network Services – Moore Park – Trileaf Project #646371**
White Road, Bailey, Michigan 49303
Muskegon County, Grant Quadrangle (USGS)
Latitude: 43° 15' 45.6" N, Longitude: 85° 48' 27.7" W
TCNS# 180995

Dear Ms. Stafford:

This project was originally submitted to your tribe via TCNS on December 7, 2018; TCNS #180995. Trileaf Corporation is in the process of completing a NEPA Review at the above referenced property. Our investigation includes determining if the site is contained in, on, or within the viewshed of a building, site, district, structure or object, significant in American history, architecture, archeology, engineering or culture, that is listed or eligible for listing on the State or National Registers of Historic Places, or located in or on, or within the viewshed of an Indian Religious Site. Trileaf has learned your tribe has an interest in property located within this County.

Our client proposes to construct a 475-foot-tall (488-feet-overall) self-support telecommunications tower and associated equipment within a proposed 80-foot by 80-foot (6,400-square-foot) lease area. An approximately 12-foot-wide access easement is proposed to extend north from the north side of the proposed telecommunications compound into a proposed service vehicle turn-around, and then east approximately 83.4 feet to an existing access drive. Currently, the site is forested land. The form 620/621 submission packet can be accessed at the following link and is also attached (if so requested) for your review:

Link: https://trileaf.sharefile.com/d-s84cc883e6eb4da9a

Please let us know if you have any objections or comments on this project as soon as possible. Contact me at (314) 997-6111 or email m.okai@trileaf.com or tribal@trileaf.com if you have any questions. Thank you for your assistance in this regard.

Sincerely,

Mindi Okai

Mindi Okai
Tribal Consultation Manager

TRILEAF™
ENVIRONMENTAL • ARCHITECTURE • ENGINEERING
10845 Olive Boulevard, Suite 260, Saint Louis, Missouri 63141 • 314.997.6111 www.trileaf.com

December 21, 2018

Pokagon Band of Potawatomi Indians
Mr. Matthew Bussler
P.O. Box 180
57824 E. Potawatomi Trail
Dowagiac, MI 49047

RE: **Pyramid Network Services – Moore Park – Trileaf Project #646371**
White Road, Bailey, Michigan 49303
Muskegon County, Grant Quadrangle (USGS)
Latitude: 43° 15' 45.6" N, Longitude: 85° 48' 27.7" W
TCNS# 180995

Dear Mr. Bussler:

This project was originally submitted to your tribe via TCNS on December 7, 2018; TCNS #180995. Trileaf Corporation is in the process of completing a NEPA Review at the above referenced property. Our investigation includes determining if the site is contained in, on, or within the viewshed of a building, site, district, structure or object, significant in American history, architecture, archeology, engineering or culture, that is listed or eligible for listing on the State or National Registers of Historic Places, or located in or on, or within the viewshed of an Indian Religious Site. Trileaf has learned your tribe has an interest in property located within this County.

Our client proposes to construct a 475-foot-tall (488-feet-overall) self-support telecommunications tower and associated equipment within a proposed 80-foot by 80-foot (6,400-square-foot) lease area. An approximately 12-foot-wide access easement is proposed to extend north from the north side of the proposed telecommunications compound into a proposed service vehicle turn-around, and then east approximately 83.4 feet to an existing access drive. Currently, the site is forested land. The form 620/621 submission packet can be accessed at the following link and is also attached (if so requested) for your review:

Link: https://trileaf.sharefile.com/d-s84cc883e6eb4da9a

Please let us know if you have any objections or comments on this project as soon as possible. Contact me at (314) 997-6111 or email m.okai@trileaf.com or tribal@trileaf.com if you have any questions. Thank you for your assistance in this regard.

Sincerely,

Mindi Okai

Mindi Okai
Tribal Consultation Manager

TRILEAF™
ENVIRONMENTAL • ARCHITECTURE • ENGINEERING
10845 Olive Boulevard, Suite 260, Saint Louis, Missouri 63141 • 314.997.6111 www.trileaf.com

December 21, 2018

Ponca Tribe of Indians of Oklahoma
Mrs. Halona Clawson
20 White Eagle Drive
Ponca City, OK 74601

RE: **Pyramid Network Services – Moore Park – Trileaf Project #646371**
White Road, Bailey, Michigan 49303
Muskegon County, Grant Quadrangle (USGS)
Latitude: 43° 15' 45.6" N, Longitude: 85° 48' 27.7" W
TCNS# 180995

Dear Mrs. Clawson:

This project was originally submitted to your tribe via TCNS on December 7, 2018; TCNS #180995. Trileaf Corporation is in the process of completing a NEPA Review at the above referenced property. Our investigation includes determining if the site is contained in, on, or within the viewshed of a building, site, district, structure or object, significant in American history, architecture, archeology, engineering or culture, that is listed or eligible for listing on the State or National Registers of Historic Places, or located in or on, or within the viewshed of an Indian Religious Site. Trileaf has learned your tribe has an interest in property located within this County.

Our client proposes to construct a 475-foot-tall (488-feet-overall) self-support telecommunications tower and associated equipment within a proposed 80-foot by 80-foot (6,400-square-foot) lease area. An approximately 12-foot-wide access easement is proposed to extend north from the north side of the proposed telecommunications compound into a proposed service vehicle turn-around, and then east approximately 83.4 feet to an existing access drive. Currently, the site is forested land. The form 620/621 submission packet can be accessed at the following link and is also attached (if so requested) for your review:

Link: https://trileaf.sharefile.com/d-s84cc883e6eb4da9a

Please let us know if you have any objections or comments on this project as soon as possible. Contact me at (314) 997-6111 or email m.okai@trileaf.com or tribal@trileaf.com if you have any questions. Thank you for your assistance in this regard.

Sincerely,

Mindi Okai

Mindi Okai
Tribal Consultation Manager

Ponca Tribe of Oklahoma
Tribal Historic Preservation Office

121 White Eagle Drive ♦ (580) 763-0120 ♦♦ Fax (580) 763-0126
Ponca City, Oklahoma 74601

2/14/2019

Mindi L Okai
10845 Olive Blvd., Ste 260
St. Louis, MO 63141
tribal@trileaf.com

SUBJECT: Concurrence Letter for FCC Pre-Construction Review of TCNS #180995

The Ponca Tribe of Oklahoma has reviewed all available information regarding the above-mentioned notice and concurs that construction of this proposed project will not adversely affect any sacred sites, traditional cultural properties or any other historic property of interest to the Ponca Tribe of Oklahoma.

However, in the event of any inadvertent discovery of any American Indian remains, funerary objects, or objects of cultural patrimony, please contact the Ponca Tribe of Oklahoma immediately.

Thank you for the opportunity to review this project and provide comments.

Mvto,

Halona Clawson
THPO
Ponca Tribe of Oklahoma
580-763-0120
halona.clawson@ponca.com

TRILEAF™
ENVIRONMENTAL • ARCHITECTURE • ENGINEERING
10845 Olive Boulevard, Suite 260, Saint Louis, Missouri 63141 • 314.997.6111 www.trileaf.com

December 21, 2018

Prairie Band of Potawatomi Nation
Mr. Thomas Wabnum
16281 Q Road
Mayetta, KS 66509

RE: **Pyramid Network Services – Moore Park – Trileaf Project #646371**
White Road, Bailey, Michigan 49303
Muskegon County, Grant Quadrangle (USGS)
Latitude: 43° 15' 45.6" N, Longitude: 85° 48' 27.7" W
TCNS# 180995

Dear Mr. Wabnum:

This project was originally submitted to your tribe via TCNS on December 7, 2018; TCNS #180995. Trileaf Corporation is in the process of completing a NEPA Review at the above referenced property. Our investigation includes determining if the site is contained in, on, or within the viewshed of a building, site, district, structure or object, significant in American history, architecture, archeology, engineering or culture, that is listed or eligible for listing on the State or National Registers of Historic Places, or located in or on, or within the viewshed of an Indian Religious Site. Trileaf has learned your tribe has an interest in property located within this County.

Our client proposes to construct a 475-foot-tall (488-feet-overall) self-support telecommunications tower and associated equipment within a proposed 80-foot by 80-foot (6,400-square-foot) lease area. An approximately 12-foot-wide access easement is proposed to extend north from the north side of the proposed telecommunications compound into a proposed service vehicle turn-around, and then east approximately 83.4 feet to an existing access drive. Currently, the site is forested land. The form 620/621 submission packet can be accessed at the following link and is also attached (if so requested) for your review:

Link: https://trileaf.sharefile.com/d-s84cc883e6eb4da9a

Please let us know if you have any objections or comments on this project as soon as possible. Contact me at (314) 997-6111 or email m.okai@trileaf.com or tribal@trileaf.com if you have any questions. Thank you for your assistance in this regard.

Sincerely,

Mindi Okai

Mindi Okai
Tribal Consultation Manager

TRILEAF™
ENVIRONMENTAL • ARCHITECTURE • ENGINEERING
10845 Olive Boulevard, Suite 260, Saint Louis, Missouri 63141 • 314.997.6111 www.trileaf.com

December 21, 2018

Prairie Island Indian Community
Mr. Noah White III
5636 Sturgeon Lake Road
Welch, MN 55089

RE: **Pyramid Network Services – Moore Park – Trileaf Project #646371**
White Road, Bailey, Michigan 49303
Muskegon County, Grant Quadrangle (USGS)
Latitude: 43° 15' 45.6" N, Longitude: 85° 48' 27.7" W
TCNS# 180995

Dear Mr. White III:

This project was originally submitted to your tribe via TCNS on December 7, 2018; TCNS #180995. Trileaf Corporation is in the process of completing a NEPA Review at the above referenced property. Our investigation includes determining if the site is contained in, on, or within the viewshed of a building, site, district, structure or object, significant in American history, architecture, archeology, engineering or culture, that is listed or eligible for listing on the State or National Registers of Historic Places, or located in or on, or within the viewshed of an Indian Religious Site. Trileaf has learned your tribe has an interest in property located within this County.

Our client proposes to construct a 475-foot-tall (488-feet-overall) self-support telecommunications tower and associated equipment within a proposed 80-foot by 80-foot (6,400-square-foot) lease area. An approximately 12-foot-wide access easement is proposed to extend north from the north side of the proposed telecommunications compound into a proposed service vehicle turn-around, and then east approximately 83.4 feet to an existing access drive. Currently, the site is forested land. The form 620/621 submission packet can be accessed at the following link and is also attached (if so requested) for your review:

Link: https://trileaf.sharefile.com/d-s84cc883e6eb4da9a

Please let us know if you have any objections or comments on this project as soon as possible. Contact me at (314) 997-6111 or email m.okai@trileaf.com or tribal@trileaf.com if you have any questions. Thank you for your assistance in this regard.

Sincerely,

Mindi Okai

Mindi Okai
Tribal Consultation Manager

TRIBAL HISTORIC PRESERVATION OFFICE

Prairie Island Indian Community, Dept. of Land & Environment
5636 Sturgeon Lake Road, Welch, MN 55089
Phone (651) 385-2554

The Prairie Island Indian Community has reviewed TCNS # 180995.

The Prairie Island Indian Community has no issues regarding this proposed project. In the event of any ground disturbing activities which may uncover human remains and or archaeological/cultural material that you notify the Prairie Island Indian Community immediately.

Thank you,

Noah White
Tribal Historic Preservation Officer
Prairie Island Indian Community

12/27/18

TRILEAF™
ENVIRONMENTAL • ARCHITECTURE • ENGINEERING
10845 Olive Boulevard, Suite 260, Saint Louis, Missouri 63141 • 314.997.6111 www.trileaf.com

December 21, 2018

Red Cliff Band of Lake Superior Chippewa Indians of Wisconsin
Ms. Edwina Buffalo-Reyes
88385 Pike Rd.
Bayfield, WI 54814

RE: **Pyramid Network Services – Moore Park – Trileaf Project #646371**
White Road, Bailey, Michigan 49303
Muskegon County, Grant Quadrangle (USGS)
Latitude: 43° 15' 45.6" N, Longitude: 85° 48' 27.7" W
TCNS# 180995

Dear Ms. Buffalo-Reyes:

This project was originally submitted to your tribe via TCNS on December 7, 2018; TCNS #180995. Trileaf Corporation is in the process of completing a NEPA Review at the above referenced property. Our investigation includes determining if the site is contained in, on, or within the viewshed of a building, site, district, structure or object, significant in American history, architecture, archeology, engineering or culture, that is listed or eligible for listing on the State or National Registers of Historic Places, or located in or on, or within the viewshed of an Indian Religious Site. Trileaf has learned your tribe has an interest in property located within this County.

Our client proposes to construct a 475-foot-tall (488-feet-overall) self-support telecommunications tower and associated equipment within a proposed 80-foot by 80-foot (6,400-square-foot) lease area. An approximately 12-foot-wide access easement is proposed to extend north from the north side of the proposed telecommunications compound into a proposed service vehicle turn-around, and then east approximately 83.4 feet to an existing access drive. Currently, the site is forested land. The form 620/621 submission packet can be accessed at the following link and is also attached (if so requested) for your review:

Link: https://trileaf.sharefile.com/d-s84cc883e6eb4da9a

Please let us know if you have any objections or comments on this project as soon as possible. Contact me at (314) 997-6111 or email m.okai@trileaf.com or tribal@trileaf.com if you have any questions. Thank you for your assistance in this regard.

Sincerely,

Mindi Okai

Mindi Okai
Tribal Consultation Manager

TRILEAF™
ENVIRONMENTAL • ARCHITECTURE • ENGINEERING
10845 Olive Boulevard, Suite 260, Saint Louis, Missouri 63141 • 314.997.6111 www.trileaf.com

December 21, 2018

Red Lake Band of Chippewa Indians of Minnesota
Mr. Kade Ferris
P.O. Box 274
Red Lake, MN 56671

RE: **Pyramid Network Services – Moore Park – Trileaf Project #646371**
White Road, Bailey, Michigan 49303
Muskegon County, Grant Quadrangle (USGS)
Latitude: 43° 15' 45.6" N, Longitude: 85° 48' 27.7" W
TCNS# 180995

Dear Mr. Ferris:

This project was originally submitted to your tribe via TCNS on December 7, 2018; TCNS #180995. Trileaf Corporation is in the process of completing a NEPA Review at the above referenced property. Our investigation includes determining if the site is contained in, on, or within the viewshed of a building, site, district, structure or object, significant in American history, architecture, archeology, engineering or culture, that is listed or eligible for listing on the State or National Registers of Historic Places, or located in or on, or within the viewshed of an Indian Religious Site. Trileaf has learned your tribe has an interest in property located within this County.

Our client proposes to construct a 475-foot-tall (488-feet-overall) self-support telecommunications tower and associated equipment within a proposed 80-foot by 80-foot (6,400-square-foot) lease area. An approximately 12-foot-wide access easement is proposed to extend north from the north side of the proposed telecommunications compound into a proposed service vehicle turn-around, and then east approximately 83.4 feet to an existing access drive. Currently, the site is forested land. The form 620/621 submission packet can be accessed at the following link and is also attached (if so requested) for your review:

Link: https://trileaf.sharefile.com/d-s84cc883e6eb4da9a

Please let us know if you have any objections or comments on this project as soon as possible. Contact me at (314) 997-6111 or email m.okai@trileaf.com or tribal@trileaf.com if you have any questions. Thank you for your assistance in this regard.

Sincerely,

Mindi Okai

Mindi Okai
Tribal Consultation Manager

From: towernotifyinfo@fcc.gov
To: tribal
Cc: tcns.fccarchive@fcc.gov; sp.historical@meskwaki-nsn.gov
Subject: Reply to Proposed Tower Structure (Notification ID: 180995) - Email ID #6121362
Date: Wednesday, December 5, 2018 10:13:13 AM

Dear Mindi L Okai,

Thank you for using the Federal Communications Commission's (FCC) Tower Construction Notification System (TCNS). The purpose of this email is to inform you that an authorized user of the TCNS has replied to a proposed tower construction notification that you had submitted through the TCNS.

The following message has been sent to you from Historic Preservation Director Johnathan L Buffalo of the Sac & Fox Tribe of the Mississippi in Iowa in reference to Notification ID #180995:

We have no interest in this site. However, if the Applicant discovers archaeological remains or resources during construction, the Applicant should immediately stop construction and notify the appropriate Federal Agency and the Tribe.

For your convenience, the information you submitted for this notification is detailed below.

Notification Received: 12/04/2018
Notification ID: 180995
Tower Owner Individual or Entity Name: Pyramid Network Services
Consultant Name: Mindi L Okai
Street Address: 10845 Olive Blvd.
Suite 260
City: St. Louis
State: MISSOURI
Zip Code: 63141
Phone: 314-997-6111
Email: tribal@trileaf.com

Structure Type: LTOWER - Lattice Tower
Latitude: 43 deg 15 min 45.6 sec N
Longitude: 85 deg 48 min 27.7 sec W
Location Description: White Road
City: Bailey
State: MICHIGAN
County: MUSKEGON

Detailed Description of Project: Legal Description: S13 T10N R13W
Ground Elevation: 264.6 meters
Support Structure: 144.8 meters above ground level
Overall Structure: 148.7 meters above ground level
Overall Height AMSL: 413.3 meters above mean sea level

TRILEAF™
ENVIRONMENTAL • ARCHITECTURE • ENGINEERING
10845 Olive Boulevard, Suite 260, Saint Louis, Missouri 63141 • 314.997.6111 www.trileaf.com

December 21, 2018

Shawnee Tribe
Ms. Kim Jumper
29 South Highway 69A
Miami, OK 74354

RE: **Pyramid Network Services – Moore Park – Trileaf Project #646371**
White Road, Bailey, Michigan 49303
Muskegon County, Grant Quadrangle (USGS)
Latitude: 43° 15' 45.6" N, Longitude: 85° 48' 27.7" W
TCNS# 180995

Dear Ms. Jumper:

This project was originally submitted to your tribe via TCNS on December 7, 2018; TCNS #180995. Trileaf Corporation is in the process of completing a NEPA Review at the above referenced property. Our investigation includes determining if the site is contained in, on, or within the viewshed of a building, site, district, structure or object, significant in American history, architecture, archeology, engineering or culture, that is listed or eligible for listing on the State or National Registers of Historic Places, or located in or on, or within the viewshed of an Indian Religious Site. Trileaf has learned your tribe has an interest in property located within this County.

Our client proposes to construct a 475-foot-tall (488-feet-overall) self-support telecommunications tower and associated equipment within a proposed 80-foot by 80-foot (6,400-square-foot) lease area. An approximately 12-foot-wide access easement is proposed to extend north from the north side of the proposed telecommunications compound into a proposed service vehicle turn-around, and then east approximately 83.4 feet to an existing access drive. Currently, the site is forested land. The form 620/621 submission packet can be accessed at the following link and is also attached (if so requested) for your review:

Link: https://trileaf.sharefile.com/d-s84cc883e6eb4da9a

Please let us know if you have any objections or comments on this project as soon as possible. Contact me at (314) 997-6111 or email m.okai@trileaf.com or tribal@trileaf.com if you have any questions. Thank you for your assistance in this regard.

Sincerely,

Mindi Okai

Mindi Okai
Tribal Consultation Manager

From: Kim Jumper
To: Mindi Okai
Subject: TCNS RESPONSES
Date: Tuesday, March 5, 2019 5:16:13 PM

180432	180353
181334	181150
181147	181149
181146	180989
181145	180907
180995	180991
180992	180919
180686	181164
180684	

The Shawnee Tribe is satisfied with efforts conducted to be sure that no Shawnee Tribe historic properties or other cultural resources will likely be adversely affected by construction and use of this tower. The Shawnee Tribe is not currently aware of any specific Shawnee Tribe cultural or historic sites in this project area. We therefore offer no objection to the proposed construction.

Because this tower lies in the homelands of the Shawnee Tribe, in the event that archaeological materials, including human remains, are discovered during construction or later ground-disturbing activities at this location, please re-open consultation at that time by contacting Kim Jumper at kim.jumper@shawnee-tribe.com or 918-542-2441. Similarly, if plans are considered to expand or modify this tower and cause additional ground disturbance in the future, please let us know. Please forward our concerns regarding any such future work and unanticipated discoveries, as well as our contact information, to the appropriate parties.

We urge everyone involved with tower development to construct and maintain their projects in keeping with best practices for minimizing environmental impact - particularly on species, such as birds and bats, who might incur negative impacts from tower development and use. Please also re-vegetate with species native to the area.

We appreciate your efforts to consult with us.

Regards,

Kim Jumper, THPO

Shawnee Tribe

TRILEAF™
ENVIRONMENTAL • ARCHITECTURE • ENGINEERING
10845 Olive Boulevard, Suite 260, Saint Louis, Missouri 63141 • 314.997.6111 www.trileaf.com

December 21, 2018

Sisseton-Wahpeton Oyate of the Lake Traverse Reservation
Ms. Dianne Desrosiers
P.O. Box 907
Sisseton, SD 57262

RE: **Pyramid Network Services – Moore Park – Trileaf Project #646371**
White Road, Bailey, Michigan 49303
Muskegon County, Grant Quadrangle (USGS)
Latitude: 43° 15' 45.6" N, Longitude: 85° 48' 27.7" W
TCNS# 180995

Dear Ms. Desrosiers:

This project was originally submitted to your tribe via TCNS on December 7, 2018; TCNS #180995. Trileaf Corporation is in the process of completing a NEPA Review at the above referenced property. Our investigation includes determining if the site is contained in, on, or within the viewshed of a building, site, district, structure or object, significant in American history, architecture, archeology, engineering or culture, that is listed or eligible for listing on the State or National Registers of Historic Places, or located in or on, or within the viewshed of an Indian Religious Site. Trileaf has learned your tribe has an interest in property located within this County.

Our client proposes to construct a 475-foot-tall (488-feet-overall) self-support telecommunications tower and associated equipment within a proposed 80-foot by 80-foot (6,400-square-foot) lease area. An approximately 12-foot-wide access easement is proposed to extend north from the north side of the proposed telecommunications compound into a proposed service vehicle turn-around, and then east approximately 83.4 feet to an existing access drive. Currently, the site is forested land. The form 620/621 submission packet can be accessed at the following link and is also attached (if so requested) for your review:

Link: https://trileaf.sharefile.com/d-s84cc883e6eb4da9a

Please let us know if you have any objections or comments on this project as soon as possible. Contact me at (314) 997-6111 or email m.okai@trileaf.com or tribal@trileaf.com if you have any questions. Thank you for your assistance in this regard.

Sincerely,

Mindi Okai

Mindi Okai
Tribal Consultation Manager

From: SWO TCNS
To: Mindi Okai
Subject: Sisseton Wahpeton Oyate Letter of No Interest
Date: Thursday, February 28, 2019 2:09:25 PM

Thank you for your submission to the Sisseton Wahpeton Oyate Tribal Historic Preservation Office. While your proposed undertaking is in our tribe's aboriginal homeland and within an area we consider significant to our tribal heritage, with potentially significant cultural resources in the area, at this time we are not able to process this request. With the economic burden of the FCC's new "rule making" and the lack of compensation for our hard work on your behalf to ensure your project is in compliance with federal cultural resource laws, we are no longer able to maintain the infrastructure and personnel necessary to process all the requests we receive.

With great regret, we submit this formal notice of no interest for:

TCNS:

1. 178817
2. 180124
3. 180118
4. 180051
5. 180362
6. 180119
7. 180134
8. 180120
9. 180061
10. 180031
11. 180360
12. 179822
13. 180143
14. 180165
15. 180410
16. 180122
17. 180356
18. 180379
19. 179810
20. 180128
21. 180390
22. 179811
23. 180392
24. 180361
25. 180421
26. 180563
27. 180589
28. 180709
29. 180142
30. 180138

31. 180687
32. 179812
33. 180714
34. 180164
35. 180590
36. 180668
37. 180419
38. 180930
39. 180564
40. 180901
41. 181150
42. 180353
43. 180684
44. 180686
45. 180910
46. 180995
47. 180904
48. 180710
49. 180679
50. 181360
51. 181361
52. 181157
53. 180933
54. 181419
55. 181408
56. 181377
57. 181148
58. 180422
59. 181520
60. 181159
61. 181366
62. 181362

If you have any questions, please contact our office.

Thank you,

Alicia Cloud
TCNS Compliance Reviewer
Sisseton-Wahpeton Oyate
Tribal Historic Preservation Office
P.O. Box 907
Sisseton, SD 57262
(605) 698-8306 office

TRILEAF™
ENVIRONMENTAL • ARCHITECTURE • ENGINEERING
10845 Olive Boulevard, Suite 260, Saint Louis, Missouri 63141 • 314.997.6111 www.trileaf.com

December 21, 2018

Sokaogon Chippewa Community
Mr. Adam VanZile
3051 Sand Lake Road
Crandon, WI 54520

RE: **Pyramid Network Services – Moore Park – Trileaf Project #646371**
White Road, Bailey, Michigan 49303
Muskegon County, Grant Quadrangle (USGS)
Latitude: 43° 15' 45.6" N, Longitude: 85° 48' 27.7" W
TCNS# 180995

Dear Mr. VanZile:

This project was originally submitted to your tribe via TCNS on December 7, 2018; TCNS #180995. Trileaf Corporation is in the process of completing a NEPA Review at the above referenced property. Our investigation includes determining if the site is contained in, on, or within the viewshed of a building, site, district, structure or object, significant in American history, architecture, archeology, engineering or culture, that is listed or eligible for listing on the State or National Registers of Historic Places, or located in or on, or within the viewshed of an Indian Religious Site. Trileaf has learned your tribe has an interest in property located within this County.

Our client proposes to construct a 475-foot-tall (488-feet-overall) self-support telecommunications tower and associated equipment within a proposed 80-foot by 80-foot (6,400-square-foot) lease area. An approximately 12-foot-wide access easement is proposed to extend north from the north side of the proposed telecommunications compound into a proposed service vehicle turn-around, and then east approximately 83.4 feet to an existing access drive. Currently, the site is forested land. The form 620/621 submission packet can be accessed at the following link and is also attached (if so requested) for your review:

Link: https://trileaf.sharefile.com/d-s84cc883e6eb4da9a

Please let us know if you have any objections or comments on this project as soon as possible. Contact me at (314) 997-6111 or email m.okai@trileaf.com or tribal@trileaf.com if you have any questions. Thank you for your assistance in this regard.

Sincerely,

Mindi Okai

Mindi Okai
Tribal Consultation Manager

TRILEAF™
ENVIRONMENTAL • ARCHITECTURE • ENGINEERING
10845 Olive Boulevard, Suite 260, Saint Louis, Missouri 63141 • 314.997.6111 www.trileaf.com

December 21, 2018

Spirit Lake Nation
Dr. Erich Longie
Tribal Historic Preservation Office
P.O. Box 198
Fort Totten, ND 58335

RE: **Pyramid Network Services – Moore Park – Trileaf Project #646371**
White Road, Bailey, Michigan 49303
Muskegon County, Grant Quadrangle (USGS)
Latitude: 43° 15' 45.6" N, Longitude: 85° 48' 27.7" W
TCNS# 180995

Dear Dr. Longie:

This project was originally submitted to your tribe via TCNS on December 7, 2018; TCNS #180995. Trileaf Corporation is in the process of completing a NEPA Review at the above referenced property. Our investigation includes determining if the site is contained in, on, or within the viewshed of a building, site, district, structure or object, significant in American history, architecture, archeology, engineering or culture, that is listed or eligible for listing on the State or National Registers of Historic Places, or located in or on, or within the viewshed of an Indian Religious Site. Trileaf has learned your tribe has an interest in property located within this County.

Our client proposes to construct a 475-foot-tall (488-feet-overall) self-support telecommunications tower and associated equipment within a proposed 80-foot by 80-foot (6,400-square-foot) lease area. An approximately 12-foot-wide access easement is proposed to extend north from the north side of the proposed telecommunications compound into a proposed service vehicle turn-around, and then east approximately 83.4 feet to an existing access drive. Currently, the site is forested land. The form 620/621 submission packet can be accessed at the following link and is also attached (if so requested) for your review:

Link: https://trileaf.sharefile.com/d-s84cc883e6eb4da9a

Please let us know if you have any objections or comments on this project as soon as possible. Contact me at (314) 997-6111 or email m.okai@trileaf.com or tribal@trileaf.com if you have any questions. Thank you for your assistance in this regard.

Sincerely,

Mindi Okai

Mindi Okai
Tribal Consultation Manager

Spirit Lake Tribe
Tribal Historic Preservation Office
PO Box 359
Fort Totten, ND 58335

To: MINDI OKAI
Date: JANUARY 16, 2019
Project: MOORE PARK
TCNS 180995

FINDING OF NO PROPERTIES - No cultural resources should be adversely affected by your proposed undertaking. If cultural materials are discovered during construction please halt activity and notify the Tribal Historic Preservation Office.

Under the authority of Section 106 of the National Historic Preservation Act of 1966 and in accordance with 36CFR800.2A4, after reviewing the materials sent, the Spirit Lake Tribal Historic Preservation Office finds there should be no properties affected by the proposed undertaking.

Please be aware though, because cultural inventories are done at different times of the year and under different circumstances there can be variations in the effectiveness of pedestrian surveys. At times, certain resources are not visible. For instance, medicinal plants, some very significant to the ongoing traditions and lifeway of our people, may only be seen in the spring or summer of the year. Other times, the grass is too deep for certain features or artifacts to be located through pedestrian surveys. With this in mind, we recommend that cultural resources not be forgotten with this letter of finding of no properties affected. **If resources are located during construction please halt activity and notify our office.**

Thank you for consulting with the Tribal Historic Preservation Office. If you have any questions please feel free to contact me at 701.351.2175, or thpo@gondtc.com

Dr. Erich Longie
Tribal Historic Preservation Officer

TRILEAF™
ENVIRONMENTAL • ARCHITECTURE • ENGINEERING
10845 Olive Boulevard, Suite 260, Saint Louis, Missouri 63141 • 314.997.6111 www.trileaf.com

December 21, 2018

Turtle Mountain Band of Chippewa Indians
Mr. Jeffrey Desjarlais Jr.
P.O. Box 900
Belcourt, ND 58316

RE: **Pyramid Network Services – Moore Park – Trileaf Project #646371**
White Road, Bailey, Michigan 49303
Muskegon County, Grant Quadrangle (USGS)
Latitude: 43° 15' 45.6" N, Longitude: 85° 48' 27.7" W
TCNS# 180995

Dear Mr. Desjarlais Jr.:

This project was originally submitted to your tribe via TCNS on December 7, 2018; TCNS #180995. Trileaf Corporation is in the process of completing a NEPA Review at the above referenced property. Our investigation includes determining if the site is contained in, on, or within the viewshed of a building, site, district, structure or object, significant in American history, architecture, archeology, engineering or culture, that is listed or eligible for listing on the State or National Registers of Historic Places, or located in or on, or within the viewshed of an Indian Religious Site. Trileaf has learned your tribe has an interest in property located within this County.

Our client proposes to construct a 475-foot-tall (488-feet-overall) self-support telecommunications tower and associated equipment within a proposed 80-foot by 80-foot (6,400-square-foot) lease area. An approximately 12-foot-wide access easement is proposed to extend north from the north side of the proposed telecommunications compound into a proposed service vehicle turn-around, and then east approximately 83.4 feet to an existing access drive. Currently, the site is forested land. The form 620/621 submission packet can be accessed at the following link and is also attached (if so requested) for your review:

Link: https://trileaf.sharefile.com/d-s84cc883e6eb4da9a

Please let us know if you have any objections or comments on this project as soon as possible. Contact me at (314) 997-6111 or email m.okai@trileaf.com or tribal@trileaf.com if you have any questions. Thank you for your assistance in this regard.

Sincerely,

Mindi Okai

Mindi Okai
Tribal Consultation Manager

TURTLE MOUNTAIN
BAND OF CHIPPEWA INDIANS
PO BOX 900 · HIGHWAY 5 WEST
BELCOURT, NORTH DAKOTA 58316

P: 701.477.2600
F: 701.477.6836

January 9, 2019

Mindi Okai
TRILEAF
10845 Olive Blvd., Suite 260
St. Louis, MO 6314

Mindi: **RE: TCNS 180995**

In accordance with Section 106 of the National Historic Preservation Act and its implementing regulations, 36 CFR Part 800, we are providing our assessment of information provided to our office for review.

Based on our review of your information, archaeological report, and additional research of the property against our records, we have made a finding that **No Historic Properties** of importance to the Turtle Mountain Band of Chippewa Indians will be affected.

No further consultation is required for this project.

Sincerely,

Jeffrey Desjarlais Jr.
Acting THPO
Turtle Mountain Tribe
(701) 477-2640

TRILEAF™
ENVIRONMENTAL • ARCHITECTURE • ENGINEERING
10845 Olive Boulevard, Suite 260, Saint Louis, Missouri 63141 • 314.997.6111 www.trileaf.com

December 21, 2018

Upper Sioux Community of Minnesota
Ms. Samantha Odegard
P.O. Box 147
Granite Falls, MN 56241

RE: **Pyramid Network Services – Moore Park – Trileaf Project #646371**
White Road, Bailey, Michigan 49303
Muskegon County, Grant Quadrangle (USGS)
Latitude: 43° 15' 45.6" N, Longitude: 85° 48' 27.7" W
TCNS# 180995

Dear Ms. Odegard:

This project was originally submitted to your tribe via TCNS on December 7, 2018; TCNS #180995. Trileaf Corporation is in the process of completing a NEPA Review at the above referenced property. Our investigation includes determining if the site is contained in, on, or within the viewshed of a building, site, district, structure or object, significant in American history, architecture, archeology, engineering or culture, that is listed or eligible for listing on the State or National Registers of Historic Places, or located in or on, or within the viewshed of an Indian Religious Site. Trileaf has learned your tribe has an interest in property located within this County.

Our client proposes to construct a 475-foot-tall (488-feet-overall) self-support telecommunications tower and associated equipment within a proposed 80-foot by 80-foot (6,400-square-foot) lease area. An approximately 12-foot-wide access easement is proposed to extend north from the north side of the proposed telecommunications compound into a proposed service vehicle turn-around, and then east approximately 83.4 feet to an existing access drive. Currently, the site is forested land. The form 620/621 submission packet can be accessed at the following link and is also attached (if so requested) for your review:

Link: https://trileaf.sharefile.com/d-s84cc883e6eb4da9a

Please let us know if you have any objections or comments on this project as soon as possible. Contact me at (314) 997-6111 or email m.okai@trileaf.com or tribal@trileaf.com if you have any questions. Thank you for your assistance in this regard.

Sincerely,

Mindi Okai

Mindi Okai
Tribal Consultation Manager

From: towernotifyinfo@fcc.gov
To: tribal
Subject: Reply to Proposed Tower Structure (Notification ID: 180995) - Email ID #6140934
Date: Friday, December 21, 2018 8:46:56 AM

Dear Mindi L Okai,

Thank you for using the Federal Communications Commission's (FCC) Tower Construction Notification System (TCNS). The purpose of this email is to inform you that an authorized user of the TCNS has replied to a proposed tower construction notification that you had submitted through the TCNS.

The following message has been sent to you from THPO Samantha Odegard of the Upper Sioux Community of Minnesota in reference to Notification ID #180995:

We have no interest in this site. However, if the Applicant discovers archaeological remains or resources during construction, the Applicant should immediately stop construction and notify the appropriate Federal Agency and the Tribe.

For your convenience, the information you submitted for this notification is detailed below.

Notification Received: 12/04/2018
Notification ID: 180995
Tower Owner Individual or Entity Name: Pyramid Network Services
Consultant Name: Mindi L Okai
Street Address: 10845 Olive Blvd.
Suite 260
City: St. Louis
State: MISSOURI
Zip Code: 63141
Phone: 314-997-6111
Email: tribal@trileaf.com

Structure Type: LTOWER - Lattice Tower
Latitude: 43 deg 15 min 45.6 sec N
Longitude: 85 deg 48 min 27.7 sec W
Location Description: White Road
City: Bailey
State: MICHIGAN
County: MUSKEGON

Detailed Description of Project: Legal Description: S13 T10N R13W
Ground Elevation: 264.6 meters
Support Structure: 144.8 meters above ground level
Overall Structure: 148.7 meters above ground level
Overall Height AMSL: 413.3 meters above mean sea level

TRILEAF™
ENVIRONMENTAL • ARCHITECTURE • ENGINEERING
10845 Olive Boulevard, Suite 260, Saint Louis, Missouri 63141 • 314.997.6111 www.trileaf.com

December 21, 2018

Winnebago Tribe of Nebraska
Mr. Randy Teboe
P.O. Box 687
Winnebago, NE 68071

RE: **Pyramid Network Services – Moore Park – Trileaf Project #646371**
White Road, Bailey, Michigan 49303
Muskegon County, Grant Quadrangle (USGS)
Latitude: 43° 15' 45.6" N, Longitude: 85° 48' 27.7" W
TCNS# 180995

Dear Mr. Teboe:

This project was originally submitted to your tribe via TCNS on December 7, 2018; TCNS #180995. Trileaf Corporation is in the process of completing a NEPA Review at the above referenced property. Our investigation includes determining if the site is contained in, on, or within the viewshed of a building, site, district, structure or object, significant in American history, architecture, archeology, engineering or culture, that is listed or eligible for listing on the State or National Registers of Historic Places, or located in or on, or within the viewshed of an Indian Religious Site. Trileaf has learned your tribe has an interest in property located within this County.

Our client proposes to construct a 475-foot-tall (488-feet-overall) self-support telecommunications tower and associated equipment within a proposed 80-foot by 80-foot (6,400-square-foot) lease area. An approximately 12-foot-wide access easement is proposed to extend north from the north side of the proposed telecommunications compound into a proposed service vehicle turn-around, and then east approximately 83.4 feet to an existing access drive. Currently, the site is forested land. The form 620/621 submission packet can be accessed at the following link and is also attached (if so requested) for your review:

Link: https://trileaf.sharefile.com/d-s84cc883e6eb4da9a

Please let us know if you have any objections or comments on this project as soon as possible. Contact me at (314) 997-6111 or email m.okai@trileaf.com or tribal@trileaf.com if you have any questions. Thank you for your assistance in this regard.

Sincerely,

Mindi Okai

Mindi Okai
Tribal Consultation Manager

TRILEAF™
ENVIRONMENTAL • ARCHITECTURE • ENGINEERING
10845 Olive Boulevard, Suite 260, Saint Louis, Missouri 63141 • 314.997.6111 www.trileaf.com

December 21, 2018

Wyandotte Nation
Ms. Sherri Clemons
Tribal Heritage Department
64700 E. Highway 60
Wyandotte, OK 74370

RE: **Pyramid Network Services – Moore Park – Trileaf Project #646371**
White Road, Bailey, Michigan 49303
Muskegon County, Grant Quadrangle (USGS)
Latitude: 43° 15' 45.6" N, Longitude: 85° 48' 27.7" W
TCNS# 180995

Dear Ms. Clemons:

This project was originally submitted to your tribe via TCNS on December 7, 2018; TCNS #180995. Trileaf Corporation is in the process of completing a NEPA Review at the above referenced property. Our investigation includes determining if the site is contained in, on, or within the viewshed of a building, site, district, structure or object, significant in American history, architecture, archeology, engineering or culture, that is listed or eligible for listing on the State or National Registers of Historic Places, or located in or on, or within the viewshed of an Indian Religious Site. Trileaf has learned your tribe has an interest in property located within this County.

Our client proposes to construct a 475-foot-tall (488-feet-overall) self-support telecommunications tower and associated equipment within a proposed 80-foot by 80-foot (6,400-square-foot) lease area. An approximately 12-foot-wide access easement is proposed to extend north from the north side of the proposed telecommunications compound into a proposed service vehicle turn-around, and then east approximately 83.4 feet to an existing access drive. Currently, the site is forested land. The form 620/621 submission packet can be accessed at the following link and is also attached (if so requested) for your review:

Link: https://trileaf.sharefile.com/d-s84cc883e6eb4da9a

Please let us know if you have any objections or comments on this project as soon as possible. Contact me at (314) 997-6111 or email m.okai@trileaf.com or tribal@trileaf.com if you have any questions. Thank you for your assistance in this regard.

Sincerely,

Mindi Okai

Mindi Okai
Tribal Consultation Manager

Appendix G

Resumes

TRILEAF™

PROFESSIONAL RESUME

CLINT CARLSON

PROJECT MANAGER

Education

B.S. Environmental Science
Minor: Biology, Psychology
Carroll University / Waukesha, WI

Areas of Expertise

Mr. Carlson has experience performing site inspections and conducting environmental due diligence pursuant to EPA All Appropriate Inquiries (AAI) and the American Society of Testing and Materials (ASTM), as well as performing National Environmental Policy Act (NEPA) reviews for wireless telecommunications projects.

Environmental service expertise includes the preparation and/or review of:

Phase I Environmental Site Assessments
Phase II Environmental Site Assessments
Vapor Intrusion Studies
Limited Site Inspections
Indoor Air Quality Assessments
Asbestos Inspections
Environmental Evaluation Summaries
Informal Section 7 Consultation
National Wetlands Inventory Maps
Flood Insurance Rate Maps
Critical Habitat Maps
Soil Characterization
Environmental Oversight
Visual Impact Assessments
Field Reconnaissance
Historical Topographic Maps and Aerial Imagery
Land Use History
Mold and Lead-Based Paint Surveys
Preliminary Risk Assessments
Soil and Groundwater Management Plans
Section 106 Compliance
NEPA Environmental Assessments
Form 620/621 Submittals
Local Government Consultation
Migratory Bird Evaluations
Native American Consultation
Architectural Site Surveys
Architectural Site Audits

Certifications/Affiliations

OSHA 40-Hour HAZWOPER
ANSI/FCC RF Radiation Safety Competent Person
Chicago Wilderness Society Certified Prescribed Burn Crew Member
Illinois Licensed Asbestos Inspector
Illinois Licensed Lead Inspector
Wisconsin Licensed Asbestos Inspector
Michigan Licensed Asbestos Inspector
Iowa Licensed Asbestos Inspector

Appendix 7.3
Construction Drawings

PROJECT DESCRIPTION

INSTALLATION OF ANTENNAS, MICROWAVE DISHES, COAXIAL CABLE, AND ASSOCIATED MOUNTS ON AN NEW 475' SELF-SUPPORT TOWER.

INSTALLATION OF A 26'X11'-8" UNMANNED EQUIPMENT SHELTER ON CONCRETE FOUNDATION.

NEW ELECTRIC SERVICE TO SITE AND EQUIPMENT SHELTER. NO WATER SUPPLY OR SEWAGE TO/FROM THE SITE.

SITE NAME:

MOORE PARK

SITE ADDRESS:

E MOORE PARK TRAIL
BAILEY, MICHIGAN 49303

SITE COORDINATES AND ELEVATION

LATITUDE – N 43° 15' 45.6" (2C LETTER)
LONGITUDE – W 85° 48' 27.7" (2C LETTER)
GRD ELEV. – ±868.1' AMSL (2C LETTER)

SITE INFORMATION

LANDLORD

COUNTY OF MUSKEGON
1563 SCENIC DR.
MUSKEGON, MI 49445

APPLICANT

XXXX

CONTACT

MOTOROLA SOLUTIONS
PH: (989) 710-1062

PROJECT MANAGER

PYRAMID NETWORK SERVICES, LLC
DON COTTRELL
PH: (573) 298-3502
EMAIL: DCATRELL@PYRAMIDNETWORKSERVICES.COM

ARCHITECTURAL AND ENGINEERING

MISSION 1 COMMUNICATIONS
MARK ALLEN
6202 CONSTITUTION DRIVE, SUITE C
FORT WAYNE, IN 46804
PH: (260) 436-3922
EMAIL: MALLEN@M1COMM.COM

CONSULTANT TEAM

COUNTY REPRESENTATIVE :	RECEIVED :
	ACCEPTED :
MOTOROLA :	RECEIVED :
	ACCEPTED :
PROPERTY OWNER:	RECEIVED :
	ACCEPTED :

RECEIVED AND ACCEPTED

DIRECTIONS TO SITE

MOORE PARK

E MOORE PARK TRAIL
BAILEY, MICHIGAN 49303
MUSKEGON COUNTY

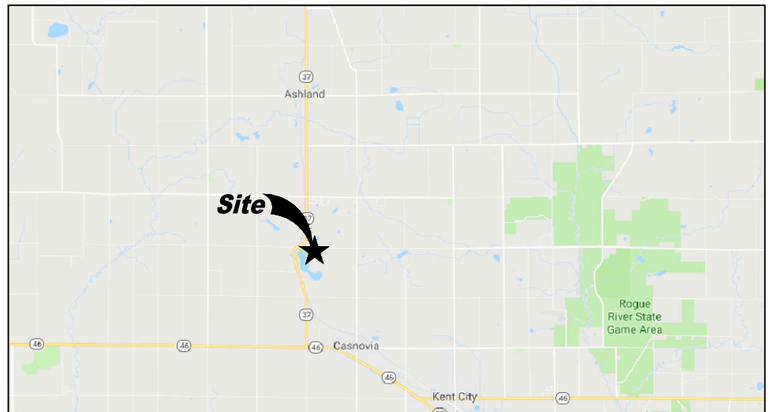

VICINITY MAP — MAP PROVIDED BY GOOGLE MAPS

LOCATION MAP — AERIAL MAP PROVIDED BY GOOGLE EARTH

DRAWING INDEX

T-1	PROJECT INFORMATION, LOCATION MAPS, AND DRAWING INDEX
1 OF 1	SITE SURVEY
GN-1	GENERAL NOTES
GN-2	GENERAL NOTES AND LEGEND
C-1	SITE LOCATION PLAN
C-2	OVERALL SITE PLAN
C-2.1	SITE GRADING PLAN
C-3	ENLARGED SITE PLAN
C-4	TOWER ELEVATION AND ANTENNA INFORMATION
C-5	ANTENNA INFORMATION
C-6	ANTENNA INFORMATION
C-7	ICE BRIDGE DETAILS
C-8	FENCE DETAILS
C-9	EQUIPMENT SHELTER PLAN
C-10	EQUIPMENT SHELTER ELEVATIONS
C-11	SITE CIVIL DETAILS
E-1	ELECTRICAL SITE PLAN
E-2	EXTERIOR ELECTRICAL DETAILS
E-3	PANEL SCHEDULES / ONE LINE DIAGRAM
E-4	GROUNDING PLAN
E-5	GROUNDING SCHEMATIC AND NOTES
E-6	GROUNDING DETAILS
E-7	GROUNDING DETAILS
E-8	PROPANE DETAILS

811 Know what's below. Call before you dig.
1-800-482-7171 CALL TOLL FREE

PRELIMINARY NOT FOR CONSTRUCTION

NO.	DATE	REVISIONS	BY	CHK	APP'D
B	12-10-18	PRELIMINARY CDs	AML	MJA	
A	11-02-18	LEASE EXHIBIT	MLM	MJA	

MISSION 1 COMMUNICATIONS
6202 Constitution Drive, Suite C
Fort Wayne, IN 46804

PYRAMID Network Services, LLC

MOTOROLA SOLUTIONS

PROJECT INFORMATION, LOCATION MAPS, AND DRAWING INDEX

MOORE PARK
E MOORE PARK TRAIL
BAILEY, MI 49303

T-1

THIS DRAWING IS COPYRIGHTED AND IS THE SOLE PROPERTY OF THE OWNER. IT IS PRODUCED SOLELY FOR USE BY THE OWNER AND ITS AFFILIATES. REPRODUCTION OR USE OF THIS DRAWING AND/OR THE INFORMATION CONTAINED IN IT IS FORBIDDEN WITHOUT THE WRITTEN PERMISSION OF THE OWNER.

ITS IS A VIOLATION OF LAW FOR ANY PERSON, UNLESS THEY ARE ACTING UNDER THE DIRECTION OF A LICENSED PROFESSIONAL ENGINEER, TO ALTER THIS DOCUMENT.

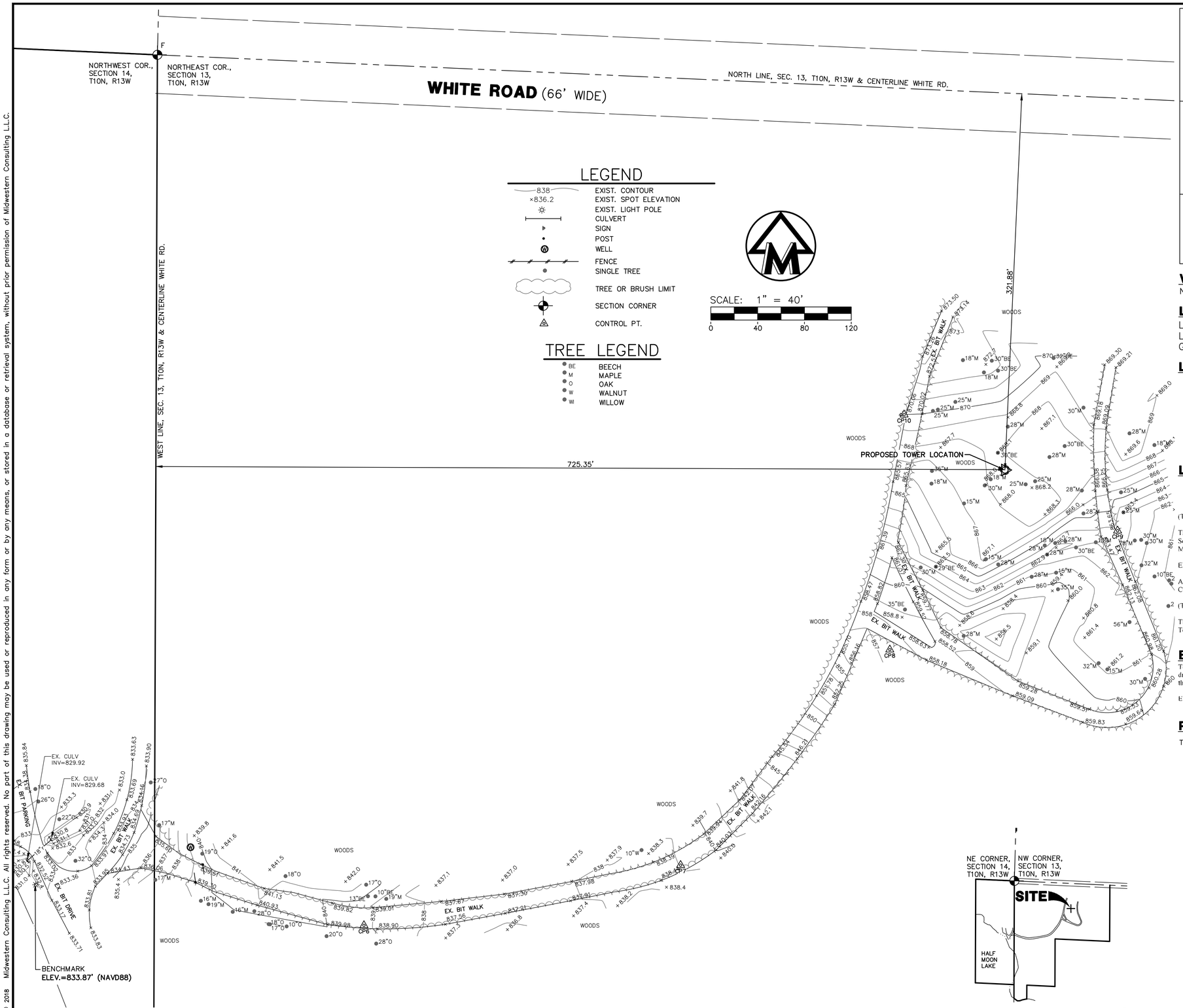

The underground utilities shown have been located from field survey information and existing records. The surveyor makes no guarantees that the underground utilities shown comprise all such utilities in the area, either in-service or abandoned. The surveyor further does not warrant that the underground utilities shown are in the exact location indicated. Although the surveyor does certify that they are located as accurately as possible from the information available.

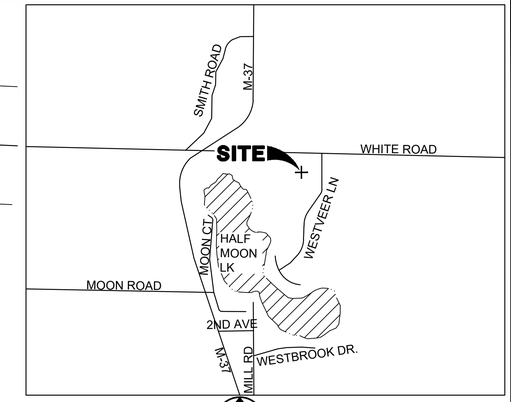

VICINITY SKETCH
NOT TO SCALE

LOCATION
LONGITUDE 85° 48' 27.7"
LATITUDE 43° 15' 45.6"
GROUND ELEV. @ TOWER BASE = 868.1

LEGAL DESCRIPTION OF LEASE PARCEL

LEGAL DESCRIPTION OF OVERALL PARCEL

LEGAL DESCRIPTION OF A PARCELS OF LAND LOCATED IN THE NORTHWEST ¼ OF SECTION 13, T10N, R13W, CASNOVIA TOWNSHIP, MUSKEGON COUNTY, MICHIGAN

(Tax Description, Parcel #61-13-013-100-0001-00)

The West 1225 feet of the North 1329.45 feet of the Northwest ¼ of the Northwest ¼ of Section 13, Town 10 North, Range 13 West, Casnovia Township, Muskegon Township, Michigan.

EXCEPT the South 609.45 feet of the East 700 feet thereof.

ALSO the West 110 feet of the Government Lot 1, Section 13, Town 10 North, Range 13 West, Casnovia Township, Muskegon County, Michigan.

(Tax Description, Parcel #61-13-014-200-0007-00)

The East 30 rods of Government Lot 1, Section 14, Town 10 North, Range 13 West, Casnovia Township, Muskegon County, Michigan

BENCH MARK
Top of nail in the north face of a wooden light pole, located on the west side of a bituminous drive, +/- 21 feet south of a 18" culvert, +/-710 feet south of White Road; +/- 17 feet northeast of the water's edge of Half Moon Lake.

Elevation = 833.87' (NAVD88)

PROPERTY INFORMATION
TAX PARCEL: #61-13-013-100-0001-00
#61-13-014-200-0007-00

OWNER: COUNTY OF MUSKEGON
1563 SCENIC DR.
MUSKEGON, MI 49445

CELL SITE ADDRESS:
_____
_____
_____

OVERALL PARCEL SKETCH
SCALE: 1"=600'

PREPARED BY:
MIDWESTERN CONSULTING, L.L.C.

PAUL KOVACS, P.S. #62151

X:\Civil3D\Symbols\borders\Pyramid\NS_Logo.jpg

SITE # #20020

MOORE PARK
CASNOVIA TOWNSHIP
MUSKEGON COUNTY
MICHIGAN

REV. DATE
REVISIONS:

MIDWESTERN CONSULTING
3815 Plaza Drive
Ann Arbor, Michigan 48108
(734) 995-0200
www.midwesternconsulting.com
Land Development • Land Survey
Institutional • Municipal
Wireless Communications
Transportation • Landfill Services

JOB No. **16188-20020**
DATE: 10/22/18
CADD: pk
ENG:
PM: pk
TECH:
FILE: 16188_20020SV01
FB#: 552A7

SITE SURVEY

1

SHEET 1 OF 1

Copyright © 2018 Midwestern Consulting L.L.C. All rights reserved. No part of this drawing may be used or reproduced in any form or by any means, or stored in a database or retrieval system, without prior permission of Midwestern Consulting L.L.C.
R:\16188\20020-Moore Park\ACAD\SURVEY\16188_20020sv01.dwg, 10/30/2018 8:34 AM, Paul Kovacs, D1-BTS-MI51-PYR-MOTO, MCLLC PDF.pc3

GENERAL REQUIREMENTS

1. GENERAL

1.1. SUMMARY OF WORK

A. THE WORK MAY CONSIST OF, BUT NOT BE LIMITED TO, THE INSTALLATION OF EQUIPMENT CABINETS, ANTENNAS ,AND LINES. FUEL TANKS, GROUNDING, ELECTRICAL WORK, ETC., ASSOCIATED WITH THE MOTOROLA EQUIPMENT AS INDICATED ON DRAWINGS AND AS SPECIFIED HEREIN. CONTRACTOR SHALL SUPPLY ALL PERMANENT MATERIALS/EQUIPMENT REQUIRED AND ALL LABOR, EQUIPMENT, TOOLS, UTILITIES, MINOR HARDWARE/MATERIALS, TRANSPORTATION AND FACILITIES NECESSARY FOR PROPER EXECUTION AND COMPLETION OF SERVICES AND INSTALL WORK, WHETHER TEMPORARY OR PERMANENT. CONTRACTOR SHALL BE OBLIGATED TO PERFORM ALL THE WORK OUTLINED IN THESE DRAWINGS IN ACCORDANCE WITH THE CONTRACT AGREEMENT, FEDERAL REGULATIONS, STATE REQUIREMENTS, LOCAL CODES, COMMERCIAL/INDUSTRY STANDARDS, DETAILED SCOPE OF WORK AND THE DOCUMENTS IDENTIFIED BELOW. IN CASE OF A CONFLICT BETWEEN THE ABOVE LISTED DOCUMENTS REGARDING STANDARDS OF WORK, THE MORE STRINGENT CRITERIA SHALL APPLY. ANY ADDITIONAL COSTS OR DELAYS RESULTING FROM CORRECTION OF THE WORK TO COMPLY WITH THE ABOVE REQUIREMENT SHALL BE THE SOLE RESPONSIBILITY OF THE CONTRACTOR.

1.2. SITE VISIT

CONTRACTOR SHALL VISIT THE SITE AND FAMILIARIZE ITSELF WITH THE SCOPE OF WORK REQUIRED PER THE DRAWINGS AND ALL LOCAL CONDITIONS AND LAWS AND REGULATIONS THAT MAY IN ANY MANNER AFFECT THE PRICE, PROGRESS AND PERFORMANCE OF WORK, INCLUDING ANY COSTS ASSOCIATED WITH IT. THE CONTRACTOR SHALL AL.SO VERIFY THAT THE PROJECT CAN BE CONSTRUCTED IN ACCORDANCE WITH THE CONTRACT DOCUMENTS AND NOTIFY THE MOTOROLA REPRESENTATIVE OF ANY DISCREPANCIES OR INTERFERENCES WHICH AFFECT THE WORK OF THIS CONTRACT.

1.3. STANDARDS AND CODES

THE FOLLOWING DOCUMENTS (LATEST REVISION) SHALL BE CONSIDERED TO BE SPECIFICATION AND ARE INCORPORATED HEREIN BY REFERENCE. IN THE EVENT OF CONFLICT BETWEEN THE REQUIREMENTS OF THIS SPECIFICATION AND THE REQUIREMENTS OF THE REFERENCED DOCUMENTS, THE STRICTER SPECIFICATION SHALL GOVERN. WHERE PROVISIONS OF THE CODES AND STANDARDS ARE IN CONFLICT WITH THE BUILDING CODE IN FORCE FOR THIS PROJECT, THE BUILDING CODE SHALL GOVERN.

A. AMERICAN CONCRETE INSTITUTE:
- ACI 301 – "SPECIFICATIONS FOR STRUCTURAL CONCRETE FOR BUILDINGS".
- ACI 305 "HOT WEATHER CONCRETING".
- ACI 306 "COLD WEATHER CONCRETING".
- ACI 318 "BUILDING CODE REQUIREMENTS FOR REINFORCED CONCRETE."
- ACI 614 "RECOMMENDED PRACTICE FOR MEASURING, MIXING AND PL.ACING CONCRETE".
- ACI 311 "RECOMMENDED PRACTICE FOR CONCRETE INSPECTION".
- ACI 315 "MANUAL OF STANDARD PRACTICE FOR DETAILING REINFORCED CONCRETE STRUCTURES".
- ACI 613 "RECOMMENDED PRACTICE FOR SELECTING PROPORTIONS FOR CONCRETE".

B. AMERICAN NATIONAL STANDARDS INSTITUTE:
- ANSI Z359 REQUIREMENTS FOR PERSONAL FALL ARREST SYSTEMS, SUBSYSTEMS AND COMPONENTS
- ANSI Z87.1 OCCUPATIONAL AND EDUCATIONAL EYE AND FACE PROTECTION
- ANSI Z89.1 PROTECTIVE HEADWEAR FOR INDUSTRIAL WORKERS –REQUIREMENTS
- ANSI/IEEE C95.1 SAFETY LEVEL..S WITH RESPECT TO HUMAN EXPOSURE TO RADIO FREQUENCY ENERGY
- ANSI/TLA/EIA STANDARD 222: STRUCTURAL STANDARDS FOR STEEL ANTENNA TOWERS AND ANTENNA SUPPORTING STRUCTURES.

C. AMERICAN INSTITUTE OF STEEL CONSTRUCTION"
- AISC MANUAL OF THE AMERICAN INSTITUTE OF STEEL CONSTRUCTION: LATEST EDITION

D. AMERICAN SOCIETY FOR TESTING AND MATERIALS:
- ASTM A615 – "SPECIFICATION FOR DEFORMED AND PLAIN BILLET STEEL BARS FOR CONCRETE REINFORCEMENT".
- ASTM C94–80 – "SPECIFICATION FOR READY–MIX CONCRETE:.
- ASTM C39–77 – "SPECIFICATION FOR TEST FOR COMPREHENSIVE STRENGTH OF CYLINDRICAL CONCRETE SPECIMEN".
- ASTM 33 – "SPECIFICATION FOR CONCRETE AGGREGATES".
- ASTM C150 – "SPECIFICATION FOR PORTLAND CEMENT".
- ASTM C172 – "SAMPLING FRESH CONCRETE".
- ASTM C143 – "SLUMP OF PORTLAND CEMENT CONCRETE".
- ASTM D698–91 – "TEST METHOD FOR LABORATORY COMPACTION CHARACTERISTICS OF SOIL USING STANDARD EFFORT".
- ASTM D1556–84– – "DENSITY OF SOIL IN PLACE BY THE SAND–CONE METHOD".
- ASTM D1557 – "TEST FOR MOISTURE–UNIT WEIGHT RELATIONS OF SOILS AND SOIL–AGGREGATE MIXTURES USING 10–LB. HAMMER AND 18–IN. DROP". (PROCEDURE C)
- ASTM D2487 – "STANDARD CLASSIFICATION OF SOILS FOR ENGINEERING PURPOSES (UNIFIED SOIL CLASSIFICATION SYSTEM)9
- ASTM D2922 – "DENSITY OF SOIL AND SOIL AGGREGATE IN PLACE BY NUCLEAR METHODS SHALLOW DEPTH".
- ASTM D2940 – "STANDARD SPECIFICATION FOR GRADED AGGREGATE MATERIAL FOR BASES OR SUB–BASES FOR HIGHWAYS OR AIRPORTS"

E. AMERICAN WELDING SOCIETY:
- AWS D12.1 – "RECOMMENDED PRACTICES FOR WELDING REINFORCING STEEL. METAL INSERTS AND CONNECTIONS IN REINFORCED CONCRETE CONSTRUCTION".

F. CONCRETE REINFORCING STEEL INSTITUTE:
- "MANUAL OF STANDARD PRACTICE"

G. FEDERAL AVIATION ADMINISTRATION:
- DEPARTMENT OF TRANSPORTATION – FEDERAL AVIATION ADMINISTRATION ADVISORY CIRCULAR, AC 70/7460–1L: OBSTRUCTION MARKING AND LIGHTING.
- DEPARTMENT OF TRANSPORTATION – FEDERAL AVIATION ADMINISTRATION ADVISORY CIRCULAR, 150–5345–43, FAA/DOD SPECIFICATION L–856: HIGH INTENSITY OBSTRUCTION LIGHTING SYSTEMS.

H. FEDERAL COMMUNICATIONS COMMISSION:
- FEDERAL COMMUNICATIONS COMMISSION – RULES AND REGULATIONS PART 17, CONSTRUCTION, MARKING, AND LIGHTING OF ANTENNA STRUCTURES.

G. STRUCTURAL STEEL PAINTING COUNCIL:
- SSPC–SP–1–63: SPECIFICATION FOR PAINTING STEEL STRUCTURES.

I. MOTOROLA R56 STANDARDS AND GUIDELINES FOR COMMUNICATIONS SITES (LATEST REVISION).

K. MOTOROLA'S CIVIL WORKS BID SPECIFICATIONS

L. NATIONAL FIRE PROTECTION ASSOCIATION:
- NFPA 1 – FIRE PREVENTION CODE
- NFPA 54 – NATURAL GAS FUEL CODE
- NFPS 58 – LP GAS CODE
- NFPA 70 – NATIONAL ELECTRICAL CODE
- NFPA 101 – LIFE SAFETY CODE
- NFPA 110 – EMERGENCY/STANDBY POWER SYSTEMS
- NFPA 111 – STANDARD ON STORED ELECTRICAL ENERGY, EMERGENCY AND STANDBY POWER SYSTEMS
- NFPA 780 – STANDARD FOR THE INSTALLATION OF LIGHTNING PROTECTION SYSTEMS

M. OCCUPATIONAL SAFETY AND HEALTH ADMINISTRATION:
- OSHA 1926
- OSHA DIRECTIVES CPL 2–1.29 – INTERIM INSPECTION PROCEDURES DURING COMMUNICATION TOWER CONSTRUCTION ACTIVITIES.

N. MICHIGAN STATE BUILDING AND ELECTRICAL CODE, OR AHJ CODES.

1.4. NOTICE TO PROCEED

WHEN THE SITE IS READY FOR INSTALLATION, MOTOROLA SHALL ISSUE A NOTICE TO PROCEED TO THE CONTRACTOR. UPON RECEIPT OF THE NOTICE OF PROCEED. THE CONTRACTOR SHALL SUBMIT TO MOTOROLA A SCHEDULE REFLECTING THE WORK PLAN. THE CONTRACTOR SHALL ADVISE THE MOTOROLA REPRESENTATIVE IMMEDIATELY OF ANY SCHEDULE CHANGES. THE CONTRACTOR SHALL ADJUST HIS WORK, AS REQUIRED, TO COORDINATE WITH THE MOTOROLA INSTALLATION TEAM IF THE SCHEDULES OVERLAP.

1.5. MOTOROLA REPRESENTATIVE

MOTOROLA SHALL DESIGNATE A REPRESENTATIVE. THIS PERSON IS THE ONLY CONTACT POINT AUTHORIZED TO MAKE ANY CHANGES TO THE CONTRACT PROVISIONS OR THE PLANS AND SPECIFICATIONS. ANY CHANGES MADE BY THE CONTRACTOR ARE AT THE CONTRACTOR'S RESPONSIBILITY AND RISK.

1.6. CONTRACTORS FIELD REPRESENTATIVE

CONTRACTOR SHALL ASSIGN A FIELD REPRESENTATIVE WHO IS FAMILIAR WITH THESE SPECIFICATIONS AND WILL REPRESENT THE CONTRACTOR AND HAVE THE AUTHORITY TO ACT FOR THE CONTRACTOR AND SUPERVISE ALL CONSTRUCTION ACTIVITIES. THE REPRESENTATIVE SHALL BE AVAILABLE WHEN CONSTRUCTION ACTIVITIES BEGIN. THE FIELD REPRESENTATIVE SHALL BE THE PRIMARY POINT OF CONTACT FOR MOTOROLA DURING THE CONSTRUCTION PHASE OF THE WORK.

1.7. PROJECT MEETINGS

THE CONTRACTOR SHALL CONDUCT THE INITIAL (PRE–CONSTRUCTION) MEETING (INCLUDING ALL SUB–CONTRACTORS) WITH THE MOTOROLA REPRESENTATIVE WITHIN TWO WEEKS AFTER AWARD OF THE CONTRACT. SUBSEQUENTLY, THE CONTRACTOR SHALL PROVIDE PROGRESS SCHEDULE UPDATES TO MOTOROLA ON A WEEKLY BASIS.

1.8. MATERIALS

CONTRACTOR SHALL FURNISH AND INSTALL ALL MATERIALS AS REQUIRED FOR COMPLETE SYSTEMS INCLUDING: ALL PARTS OBVIOUSLY OR REASONABLY INCIDENTAL TO A COMPLETE INSTALLATION, WHETHER SPECIFICALLY INDICATED OR NOT. ALL SYSTEMS SHALL BE COMPLETELY ASSEMBLED, TESTED, ADJUSTED, AND DEMONSTRATED TO BE READY FOR OPERATION PRIOR TO MOTOROLA'S ACCEPTANCE.

MATERIALS AND WORKMANSHIP SHALL BE THE BEST OF THEIR RESPECTIVE KINDS (AS DEFINED BY INDUSTRY STANDARDS), FREE OF DEFECTS AND ALL MATERIALS SHALL BE NEW AND UNUSED IN ALL CASES, UNLESS OTHERWISE SPECIFIED. WHERE THE NAME OF A CONCERN OR MANUFACTURER IS MENTIONED ON DRAWINGS OR IN SPECIFICATIONS IN REFERENCE TO A REQUIRED SERVICE OR PRODUCT, AND NO QUALIFICATIONS OR SPECIFICATION OF SUCH IS INCLUDED, THEN THE MATERIAL SPECIFICATIONS, DETAILS OF MANUFACTURE, FINISH, ETC., SHALL BE IN ACCORDANCE WITH MANUFACTURER'S STANDARD PRACTICE, DIRECTION OR SPECIFICATIONS. THE CONTRACTOR SHALL INSTALL ALL EQUIPMENT AND MATERIALS ACCORDING TO THE MANUFACTURER'S / VENDOR'S SPECIFICATIONS UNLESS NOTED OTHERWISE OR WHERE LOCAL CODES OR ORDINANCES TAKE PRECEDENCE.

1.9. VERIFICATION OF EXISTING CONDITIONS

BEFORE STARTING ANY OPERATION, THE CONTRACTOR SHALL EXAMINE EXISTING WORK, OR WORK PERFORMED BY OTHERS, TO WHICH ITS WORK IS TO ADJOIN OR BE APPLIED AND SHALL REPORT TO MOTOROLA PROJECT MANAGER ANY CONDITIONS THAT WILL PREVENT SATISFACTORY ACCOMPLISHMENT OF HIS WORK. PRIOR TO COMMENCING ANY EXCAVATION OR GRADING, THE CONTRACTOR SHALL SATISFY HIMSELF AS TO THE ACCURACY OF ALL SURVEY DATA AS INDICATED IN THE PLANS AND SPECIFICATIONS AND/OR AS PROVIDED BY MOTOROLA. SHOULD THE CONTRACTOR DISCOVER ANY INACCURACIES, ERRORS, OR OMISSIONS IN THE SURVEY DATA, HE SHALL IMMEDIATELY NOTIFY THE MOTOROLA REPRESENTATIVE IN ORDER THAT PROPER ADJUSTMENTS CAN BE ANTICIPATED AND ORDERED. FAILURE TO NOTIFY THE MOTOROLA REPRESENTATIVE OF DEFICIENCIES, ERRORS OR FAULTS PRIOR TO COMMENCEMENT OF WORK SHALL CONSTITUTE ACCEPTANCE THEREOF AND WAIVER OF ANY CLAIMS OF UNSUITABILITY, ERRORS, OMISSIONS OR INACCURACIES.

THE CONTRACTOR SHALL MAKE NECESSARY PROVISIONS TO PROTECT EXISTING IMPROVEMENTS, EASEMENTS, ETC. DURING CONSTRUCTION. UPON COMPLETION OF WORK, THE CONTRACTOR SHALL REPAIR ANY DAMAGE THAT MAY HAVE OCCURRED DUE TO CONSTRUCTION ON OR ABOUT THE PROPERTY. THE CONTRACTOR SHALL ALSO BE RESPONSIBLE FOR PRESERVING ALL ESTABLISHED SURVEY CONTROL POINTS. IF THE CONTRACTOR OR ANY OF HIS SUB–CONTRACTORS MOVE OR DESTROY ANY SURVEY CONTROL POINTS, THE COST INCURRED BY THE LAND OWNER OR MOTOROLA TO RE–ESTABLISH THEM WILL BE BORNE BY THE CONTRACTOR.

PRELIMINARY NOT FOR CONSTRUCTION

NO.	DATE	REVISIONS	BY	CHK	APP'D
B	12–10–18	PRELIMINARY CDs	AML	MJA	
A	11–02–18	LEASE EXHIBIT	MLM	MJA	

MISSION 1 COMMUNICATIONS
6202 Constitution Drive, Suite C
Fort Wayne, IN 46804

PYRAMID Network Services, LLC

MOTOROLA SOLUTIONS

GENERAL NOTES

MOORE PARK
E MOORE PARK TRAIL
BAILEY, MI 49303

GN-1

THIS DRAWING IS COPYRIGHTED AND IS THE SOLE PROPERTY OF THE OWNER. IT IS PRODUCED SOLELY FOR USE BY THE OWNER AND ITS AFFILIATES. REPRODUCTION OR USE OF THIS DRAWING AND/OR THE INFORMATION CONTAINED IN IT IS FORBIDDEN WITHOUT THE WRITTEN PERMISSION OF THE OWNER.

ITS IS A VIOLATION OF LAW FOR ANY PERSON, UNLESS THEY ARE ACTING UNDER THE DIRECTION OF A LICENSED PROFESSIONAL ENGINEER, TO ALTER THIS DOCUMENT.

1.10. PERMITS

THE CONTRACTOR SHALL GIVE ALL NOTICES AND COMPLY WITH ALL LAWS, ORDINANCES, RULES, REGULATIONS AND LAWFUL ORDERS OF ANY PUBLIC AUTHORITY, MUNICIPAL AND UTILITY COMPANY SPECIFICATIONS, AND LOCAL AND STATE JURISDICTIONAL CODES BEARING ON THE PERFORMANCE OF THE WORK. THE CONTRACTOR SHALL BE RESPONSIBLE FOR OBTAINING ALL PERMITS AND INSPECTIONS WHICH MAY BE REQUIRED FOR THE WORK BY THE STATE, COUNTY OR LOCAL GOVERNMENT AUTHORITY. THE WORK PERFORMED ON THE PROJECT AND THE MATERIALS INSTALLED SHALL BE IN STRICT ACCORDANCE WITH ALL APPLICABLE CODES, REGULATIONS, AND ORDINANCES. THE CONTRACTOR SHALL MEET ALL OF THE REGULATORY REQUIREMENTS OF THE JURISDICTION GOVERNING CONSTRUCTION.

1.11. SITE INSPECTION

THE CONTRACTOR SHALL HAVE THE RESPONSIBILITY FOR ARRANGING WITH MOTOROLA FOR AN INSPECTION PRIOR TO COVERING UP ALL WORK THAT WILL BE COVERED IN FINISHED CONDITION. IT IS THE SITE GENERAL CONTRACTOR'S RESPONSIBILITY TO MANAGE THE SEQUENCE OF WORK AND REQUEST THE INSPECTIONS IN A TIMELY MANNER. THE SITE GENERAL CONTRACTOR SHALL NOT REQUEST AN INSPECTION UNLESS ALL OF THE RELATED WORK HAS BEEN COMPLETED. WORK SHALL. NOT PROCEED TO THE NEXT STEP UNTIL THE PREVIOUS STEP HAS BEEN INSPECTED AND APPROVED BY THE LOCAL INSPECTORS AND THE MOTOROLA REPRESENTATIVE. THE PRESENCE OF THE OWNER OR MOTOROLA REPRESENTATIVE ON THE JOB SITE IN NO WAY RELIEVES THE SITE GENERAL CONTRACTOR OF THE ASSOCIATED RESPONSIBILITIES OF THE JOB. ANY WORK WHICH DOES NOT MEET THE REQUIREMENTS OF THE CONTRACT DOCUMENTS WILL BE CORRECTED OR REMOVED SOLELY AT THE SITE GENERAL CONTRACTOR'S EXPENSE.

THE FOLLOWING INFORMATION IS INCLUDED AS A GUIDE TO THE CONTRACTOR TO ASSIST IN DETERMINING THE TYPE AND FREQUENCY OF INSPECTIONS. THE LISTED INSPECTIONS REPRESENT THOSE REQUIRED FOR SMALL OR SIMPLE PROJECTS. LARGE OR COMPLEX PROJECTS MAY REQUIRE ADDITIONAL INSPECTIONS DEPENDING ON THE SEQUENCE OF WORK.

- FOUNDATION EXCAVATIONS AND REBAR: TO BE MADE AFTER TRENCHES ARE EXCAVATED AND FORMS ERECTED, REINFORCEMENT PLACED, COMPACTION TESTED, SOIL TREATED, VAPOR BARRIER PLACED, AND ESSENTIALLY READY FOR CONCRETE PLACEMENT.
- GROUNDING: TO BE MADE AFTER THE BELOW GROUND CADWELD CONNECTIONS HAVE BEEN COMPLETED, PRIOR TO COVERING UP THE TRENCHES.
- ELECTRICAL WORK WITHIN WALLS: TO BE MADE AFTER THE ROOF, FRAMING, FIRE BLOCKING AND BRACING IS IN PLACE PRIOR TO THE INSTALLATION OF INSULATION OR WALL/CEILING MEMBRANES.

AS A GENERAL RULE. THE CONTRACTOR SHALL PROVIDE ADVANCE NOTICE TO MOTOROLA FOR INSPECTION OF ALL WORK PRIOR TO CONCEALMENT. THE CONTRACTOR HAS RESPONSIBILITIES RELATIVE TO ALL TYPES OF INSPECTIONS AND IS RESPONSIBLE FOR CONTACTING ALL OF THE INSPECTING ENTITIES TO DETERMINE HIS RESPONSIBILITIES. ALL OF THESE INSPECTING ENTITIES HAVE UNIQUE AND SEPARATE RESPONSIBILITIES. ONE INSPECTION FROM AN ENTITY WILL NOT SUBSTITUTE FOR AN INSPECTION FROM ANOTHER ENTITY.

1.12. SAFETY

THE CONTRACTOR, HIS EMPLOYEES, ANY SUB-CONTRACTORS, VENDORS, THEIR RESPECTIVE EMPLOYEES AND CONTRACTOR'S VISITORS SHALL COMPLY WITH ALL SAFETY STANDARDS, ACCIDENT PREVENTION REGULATIONS AND ENVIRONMENTAL REGULATIONS PROMULGATED BY FEDERAL. STATE OR LOCAL. AUTHORITIES HAVING JURISDICTION AND SHALL AT ALL TIMES CONDUCT ALL OPERATIONS UNDER THE CONTRACT IN A MANNER TO AVOID THE RISK OF BODILY HARM TO ANY PERSONS AND THE RISK OF DAMAGE TO ANY PROPERTY, EQUIPMENT OR MATERIAL SUCH PARTIES SHALL ALSO COMPLY WITH ANY SAFETY PROGRAMS AND/OR RULES PROMULGATED BY OWNER AND/OR MOTOROLA.

1.13. ELECTRO MAGNETIC EMISSIONS

THE CONTRACTOR SHALL ACKNOWLEDGE ALL OR PORTIONS OF THE WORK MAY INVOLVE POSSIBLE EXPOSURE OF CONTRACTOR. SUB-CONTRACTORS, AND THEIR RESPECTIVE EMPLOYEES, AGENTS, INVITEES, LICENSEES AND OTHER VISITORS TO THE JOBSITE AND/OR MOTOROLA PREMISES TO ELECTRO-MAGNETIC ENERGY ("EME") WHILE PERFORMING WORK UNDER THIS CONTRACT, ESPECIALLY IF WORK IS PERFORMED ON EXISTING ANTENNA TOWERS WHERE ANTENNAS ARE LOCATED. THE CONTRACTOR REPRESENTS THAT CONTRACTOR, SUBCONTRACTORS, AND ALL OF THEIR RESPECTIVE EMPLOYEES, AGENTS, INVITEES, LICENSEES, AND OTHER AUTHORIZED REPRESENTATIVES WHO ARE PERFORMING SERVICES UNDER THIS AGREEMENT WILL COMPLY WITH ALL ANSI AND ANY OTHER APPLICABLE EME STANDARDS, RULES OR REGULATIONS, INCLUDING, BUT NOT LIMITED TO THOSE RULES OR REGULATIONS IMPOSED OR SUGGESTED BY MOTOROLA, IF ANY.

THE CONTRACTOR SHALL ADHERE TO ALL OSHA RULES, REGULATIONS AND ADOPTED POLICIES. ALL CONTRACTOR PERSONNEL SHALL HAVE UNDERGONE ELECTROMAGNETIC ENERGY (EME) TRAINING FOR PERSONNEL WORKING IN THE VICINITY OF ACTIVE ANTENNAS. AS SUCH IT IS RECOMMENDED THAT RF MONITORS BE USED BY THE TOWER PERSONNEL TO MONITOR EXPOSURE LEVELS. IF EME LEVELS AT THE SITE EXCEED THE MAXIMUM PERMISSIBLE EXPOSURE LIMITS, THE CONTRACTOR SHALL COORDINATE WITH THE INDIVIDUALS RESPONSIBLE FOR USE OF THE TRANSMITTER TO MAKE SURE THAT THE EQUIPMENT IS DEACTIVATED BEFORE WORK CAN BE RESUMED, WITHOUT CAUSING A SERIOUS DISRUPTION OF THE SERVICE.

1.14. SITE CLEANUP

THE CONTRACTOR SHALL KEEP THE GENERAL WORK AREA CLEAN AND HAZARD FREE AT ALL TIMES DURING CONSTRUCTION AND DISPOSE OF ALL DIRT, DEBRIS, VEGETATION, AND RUBBISH, AND REMOVE EQUIPMENT NOT SPECIFIED AS REMAINING ON THE PROPERTY. WHENEVER THE WORK-SITE IS LEFT UNATTENDED, THE CONTRACTOR SHALL BLOCK THE OPENING WITH WARNING TAPE TO DISCOURAGE TRESPASSING. THE PREMISES SHALL BE LEFT IN CLEAN CONDITION AND FREE FROM PAINT SPOTS, DUST, OR SMUDGES OF ANY NATURE AT THE CONCLUSION OF SITE WORK.

THE CONTRACTOR SHALL BE RESPONSIBLE FOR LANDSCAPE GRADING AND SEEDING OF THE DISTURBED SOIL THE CONTRACTOR SHALL USE LOCAL GRASS SEED TO STABILIZE SOIL AND SHALL COVER DISTURBED AREAS WITH HAY MULCH TO REDUCE RUNOFF OF SEDIMENT TO DOWNSTREAM AREAS. THE CONTRACTOR SHALL RESTORE THE SITE TO ITS ORIGINAL CONDITION. ALL SLOPES AND DISTURBED AREAS NOT RECEIVING AGGREGATE SURFACING ARE TO BE PREPARED AND BROADCAST SEEDED AND FERTILIZED FOR EROSION PROTECTION. SEEDING FOR AREAS DISTURBED SHALL BE ESTABLISHED SEASONALLY AS REQUIRED BY LOCAL CODES.

THE CONTRACTOR SHALL EXERCISE ALL CARE TO AVOID DAMAGE OR INTERRUPTION OF EXISTING UNDERGROUND OR OVERHEAD ELECTRIC SERVICES, UNDERGROUND GROUNDING AND FUEL LINES, EQUIPMENT AND BUILDINGS ON THE SITE, PLUS OFF SITE SERVICES, BURIED OR OVERHEAD, SURROUNDING THE EXISTING OR EXPANDED COMPOUND. ANY PROPERTY DAMAGE CAUSED BY THE CONTRACTOR OR HIS OPERATIONS SHALL BE CORRECTED AND/OR RESTORED TO THE SATISFACTION OF THE PROPERTY OWNER(S) AND MOTOROLA AT NO ADDITIONAL COST TO THE PROPERTY OWNER OR MOTOROLA. BURNING WILL NOT BE PERMITTED.

1.15. FACILITY STARTUP & COMMISSIONING

THE CONTRACTOR AND/OR SUB-CONTRACTORS SHALL DEMONSTRATE TO MOTOROLA THAT ALL SYSTEMS AND SUB-SYSTEMS INSTALLED UNDER THIS CONTRACT, OPERATE PROPERLY PRIOR TO THE FINAL ACCEPTANCE INSPECTION AND PROVIDE THE OPERATIONS AND MAINTENANCE MANUALS AT THIS TIME.

1.16. SHOP DRAWINGS/AS-BUILT DRAWINGS

THE MODIFICATIONS TO THE DRAWINGS AFTER CONSTRUCTION START SHALL RECEIVE ENGINEERING AND MOTOROLA APPROVAL PRIOR TO ANY CHANGES BEING MADE. THE ENGINEER OF RECORD SHALL MAKE THE REQUIRED CHANGE AND WILL SUBMIT CHANGES TO MOTOROLA AND ANY JURISDICTION HAVING AUTHORITY.

THE CONTRACTOR SHALL KEEP UP-TO-DATE MARKED-UP PRINTS OF THE PROJECT DRAWINGS. UPON COMPLETION OF WORK AT THE SITE, THE CONTRACTOR SHALL REVIEW THE COMPLETED AS-BUILT DRAWINGS, AND ASCERTAIN THAT ALL DATA FURNISHED ON THE DRAWINGS IS ACCURATE AND TRULY REPRESENTS THE WORK IS ACTUALLY INSTALLED. MARKINGS INDICATING CHANGES TO THE DRAWINGS SHALL BE RED OR GREEN AND CLEARLY VISIBLE. TWO (2) SETS OF "AS-BUILT" DRAWINGS SHALL BE FURNISHED TO THE MOTOROLA REPRESENTATIVE WITHIN 5 DAYS OF THE COMPLETION OF THE PROJECT. THESE DRAWINGS SHALL ALSO SHOW THE FOLLOWING:

- MODIFICATIONS TO SITE LAYOUT.
- GROUNDING SYSTEM LAYOUT.
- UNDERGROUND FUEL LINE RUN.
- UNDERGROUND TELCO CABLE RUN.
- UNDERGROUND ELECTRICAL RUN.

WHERE THE CONTRACTOR IS RESPONSIBLE FOR SUPPLYING THE SITE EQUIPMENT ROOM. ISOLATION TRANSFORMER. GENERATOR, ETC.) THAT REQUIRES PERIODIC MAINTENANCE, THE CONTRACTOR SHALL INCLUDE ALL OPERATION AND MAINTENANCE MANUALS AND ALL AS-BUILT DRAWINGS WHICH FULLY DESCRIBE THE ACTUAL INSTALLED EQUIPMENT.

1.17. TEST PROCEDURES AND RESULTS

CONTRACTOR WILL CONTRACT WITH A THIRD PARTY "INDEPENDENT" TESTING FIRM TO PERFORM & SUBMIT THE RESULTS OF ALL TESTS REQUIRED BY THE PROJECT SPECIFICATIONS AND DRAWINGS THAT FALL WITHIN THE SCOPE OF WORK. THESE RESULTS SHALL BE SUBMITTED TO THE DESIGNATED MOTOROLA REPRESENTATIVE. IN GENERAL, THE "INDEPENDENT" TESTING FIRM SHALL SUBMIT THE FOLLOWING TEST RESULTS:

- MIX DESIGN/CONCRETE COMPRESSION TEST FOR ALL CONCRETE WORK.
- FREQUENCY DOMAIN REFLECTOMETER (FDR) WITH PRECISION LOAD / SWEEP TEST FOR ANTENNA AND TRANSMISSION LINE INSTALLATION WORK. ALL SWEEP AND TEST MUST BE WITHIN THE GUIDELINES OUTLINED IN MOTOROLA MOP.
- FUEL LINE LEAKAGE TEST FOR FUEL TANK AND PIPING INSTALLATION WORK.
- SLUMP TEST FOR CONCRETE WORK.
- GROUNDING RESISTANCE TEST FUR GROUNDING WORK.
- STRUCTURAL STEEL FABRICATION DRAWINGS.
- STRUCTURAL (TOWER) STEEL MATERIALS, FINISH, ASSEMBLY, AND PROPER ASSEMBLY AND INSTALLATION OF ANTENNAS AND TRANSMISSION LINES. ("THIRD PARTY CLIMB" AND REPORT INCLUDING PHOTO DOCUMENTATION)
- ANY OTHER TEST THAT MAY BE REQUIRED.

1.18. CONTRACT CLOSEOUT – IN ACCORDANCE WITH MOTOROLA'S SUBCONTRACT AGREEMENT TERMS AND CONDITIONS

THE MOTOROLA REPRESENTATIVE WILL PROVIDE A CERTIFICATE OF COMPLETION AND APPROVE FINAL PAYMENT WHEN ALL PUNCH-LIST ITEMS HAVE BEEN CORRECTED, RECORD DRAWINGS SUBMITTED, AND ALL SYSTEMS ARE ACCEPTABLE. THE CONTRACTOR MUST ALSO RECEIVE A CERTIFICATE OF COMPLETION FROM THE MUNICIPALITY. AFTER FINAL PAYMENT, CONTRACTOR WILL SIGN A RELEASE OF LIEN.

1.19. WARRANTY

ALL WORK PERFORMED BY THE CONTRACTOR IN COMPLETING THE SCOPE IDENTIFIED ON THE DRAWINGS SHALL BE GUARANTEED BY THE CONTRACTOR FOR A PERIOD OF ONE YEAR FROM THE DATE OF FINAL COMPLETION OF THE PROJECT. THIS GUARANTEE SHALL COVER ALL MATERIALS, EQUIPMENT OR WORKMANSHIP WHICH IN THE OPINION OF MOTOROLA IS RENDERED DEFECTIVE OR INFERIOR OR NOT IN ACCORDANCE WITH THE TERMS OF THE CONTRACT DURING THE GUARANTEE PERIOD. IF, WITHIN THE GUARANTEE PERIOD, REPAIRS OR CHANGES ARE REQUIRED TO CORRECT THE GUARANTEE WORK. THEN UPON RECEIPT OF NOTICE, THE CONTRACTOR SHALL PROMPTLY AND WITHOUT EXPENSE TO MOTOROLA OR THE OWNER, PROCEED TO:

- PLACE IN SATISFACTORY CONDITION ALL OF SUCH GUARANTEED WORK AND CORRECT ALL DEFECTS THEREIN.
- MAKE GOOD ALL DAMAGES TO THE STRUCTURE OR SITE OR EQUIPMENT OR CONTENTS THEREOF, WHICH, IN THE OPINION OF THE MOTOROLA REPRESENTATIVE, IS THE RESULT OF THE USE OF MATERIALS, EQUIPMENT, OR WORKMANSHIP WHICH ARE INFERIOR, DEFECTIVE, OR NOT IN ACCORDANCE WITH THE TERMS OF THE CONTRACT;
- MAKE GOOD ANY WORK, MATERIALS OR EQUIPMENT AND ADJACENT STRUCTURES DISTURBED IN FULFILLING THE GUARANTEE.

1.20. RELATED DOCUMENTS

CONTRACTOR SHALL BECOME FAMILIAR WITH THE INFORMATION AND REQUIREMENTS CONTAINED IN THE FOLLOWING DOCUMENTS RELATED TO THE PROJECT:

A. TOWER AND TOWER FOUNDATION DRAWINGS BY THE MANUFACTURER.

B. R-56 STANDARDS AND GUIDELINES FOR COMMUNICATIONS SITES BY MOTOROLA.

C. ALL OTHER PERTINENT DOCUMENTS.

Abbreviations and Symbols

A/C	AIR CONDITIONING
ADJ	ADJUSTABLE
AFF	ABOVE FINISH FLOOR
APPROX	APPROXIMATELY
ASTM	AMERICAN SOCIETY FOR TESTING AND MATERIALS
AWG	AMERICAN WIRE GAUGE
BLDG	BUILDING
BLK	BLOCK
BMR	BASE MOBILE RADIO
B/S	BUILDING STANDARD
CLG	CEILING
CLR	CLEAR
CND,C	CONDUIT
CONC	CONCRETE
CONST	CONSTRUCTION
CONT	CONTINUOUS
DBL	DOUBLE
DIA,ø	DIAMETER
DIAG	DIAGONAL
DIM	DIMENSION
DN	DOWN
DTL,DETL	DETAIL
DWG	DRAWING
E	EAST
EA	EACH
EL,ELEV	ELEVATION
ELECT	ELECTRICAL
EQ	EQUAL
EQUIP	EQUIPMENT
EW	EACH WAY
EXIST	EXISTING
EXT	EXTERIOR
FIN	FINISH
FLUOR	FLUORESCENT
FLR	FLOOR
FT	FOOT
GA	GAUGE
GALV	GALVANIZE(D)
GC	GENERAL CONTRACTOR
GRND	GROUND
GWB	GYPSUM WALL BOARD
GYP BD	GYPSUM BOARD
HARD'WD	HARDWOOD
HORIZ	HORIZONTAL
HR	HOUR
HT	HEIGHT
HVAC	HEATING, VENTING & AIR CONDITIONING
ID	INSIDE DIA.
IN	INCH
INFO	INFORMATION
INSUL.	INSULATION
INT	INTERIOR
LB(S)	POUND(S)
MAX	MAXIMUM
MECH	MECHANICAL
MET,MTL	METAL
MFR	MANUFACTURER
MGR	MANAGER
MIN	MINIMUM
MISC	MISCELLANEOUS
N	NORTH
N/A	NOT APPLICABLE
NIC	NOT IN CONTRACT
NTS	NOT TO SCALE
O/C,O.C.	ON CENTER
OD	OUTSIDE DIAMETER
OPG	OPENING
OPP	OPPOSITE
PLYWD	PLYWOOD
PR	PAIR
PROJ	PROJECT
PROP	PROPERTY
PT	PRESSURE TREATED
REQ'D	REQUIRED
RM	ROOM
RO	ROUGH OPENING
S	SOUTH
SHT	SHEET
SIM	SIMILAR
SPEC	SPECIFICATION
SQ	SQUARE
SS	STAINLESS STEEL
STL	STEEL
STRUCT	STRUCTURAL
SUSP	SUSPENDED
SV	SHEET VINYL
THRU	THROUGH
TNND	TINNED
TOC	TOP OF CONCRETE
TOM	TOP OF MASONRY
TYP	TYPICAL
UBC	UNIFORM BUILDING CODE
UNO	UNLESS NOTED OTHERWISE
VERT	VERTICAL
VIF	VERIFY IN FIELD
VT	VINYL TILE
W	WEST
W/	WITH
WIN	WINDOW
W/O	WITHOUT
WP	WATERPROOF
∡	ANGLE
&	AND
℄	CENTER LINE
℘	PROPERTY LINE
@	AT
#	NUMBER

Symbols

1	REVISION
1	KEY NOTE
100	ROOM NUMBER
22	KEYED NOTE
1 / T-1	DETAIL REFERENCE
1 / T-1	ELEVATION REFERENCE
1 / T-1	SECTION REFERENCE

PRELIMINARY NOT FOR CONSTRUCTION

NO.	DATE	REVISIONS	BY	CHK	APP'D
B	12-10-18	PRELIMINARY CDs	AML	MJA	
A	11-02-18	LEASE EXHIBIT	MLM	MJA	

MISSION 1 COMMUNICATIONS
6202 Constitution Drive, Suite C
Fort Wayne, IN 46804

PYRAMID Network Services, LLC

MOTOROLA SOLUTIONS

GENERAL NOTES AND LEGEND

MOORE PARK
E MOORE PARK TRAIL
BAILEY, MI 49303

GN-2

THIS DRAWING IS COPYRIGHTED AND IS THE SOLE PROPERTY OF THE OWNER. IT IS PRODUCED SOLELY FOR USE BY THE OWNER AND ITS AFFILIATES. REPRODUCTION OR USE OF THIS DRAWING AND/OR THE INFORMATION CONTAINED IN IT IS FORBIDDEN WITHOUT THE WRITTEN PERMISSION OF THE OWNER.

ITS IS A VIOLATION OF LAW FOR ANY PERSON, UNLESS THEY ARE ACTING UNDER THE DIRECTION OF A LICENSED PROFESSIONAL ENGINEER, TO ALTER THIS DOCUMENT.

GENERAL NOTES:

1. PROPERTY OFFSETS ARE APPROXIMATE. FINAL LOCATION OF COMPOUND TO BE DEVELOPED FROM TOWER ℄

2. THE LOCATION, SIZE & TYPE OF MATERIAL OF EXISTING UTILITIES INDICATED ON THE PLANS IS NOT REPRESENTED AS BEING ACCURATE, SUFFICIENT OR COMPLETE. IT SHALL BE THE CONTRACTOR'S RESPONSIBILITY TO DETERMINE THE ACTUAL LOCATION OF ALL SUCH FACILITIES, INCLUDING THE SERVICE CONNECTIONS TO UNDERGROUND UTILITIES. PRIOR TO CONSTRUCTION THE CONTRACTOR SHALL NOTIFY THE UTILITY COMPANIES OF HIS OPERATIONAL PLANS & SHALL OBTAIN FROM THE RESPECTIVE UTILITY COMPANIES DETAILED INFORMATION & ASSISTANCE RELATIVE TO THE LOCATION OF THEIR FACILITIES & THE WORKING SCHEDULE OF THE COMPANIES FOR REMOVAL OR ADJUSTMENT WHERE REQUIRED. IN THE EVENT AN UNEXPECTED UTILITY INTERFERENCE IS ENCOUNTERED DURING CONSTRUCTION, THE CONTRACTOR SHALL IMMEDIATELY NOTIFY THE UTILITY COMPANY OF JURISDICTION. THE ENGINEER SHALL ALSO BE IMMEDIATELY NOTIFIED. ANY SUCH MAINS & SERVICES SHALL BE RESORTED TO SERVICE AT ONCE & PAID FOR BY THE CONTRACTOR AT NO ADDITIONAL COST TO THE CONTRACT.

3. ALL CONSTRUCTION ACTIVITIES & MODIFICATIONS SHALL COMPLY WITH MOTOROLA R-56 STANDARDS, MOST CURRENT REVISION.

ANY DISCREPANCIES BETWEEN THIS DRAWING PACKAGE AND EXISTING FIELD CONDITIONS MUST BE REPORTED TO THE ENGINEER OF RECORD PRIOR TO THE COMMENCEMENT OF CONSTRUCTION.

Site Location Plan

NORTH

50 0 50 100

1 inch = 100ft.

811 Know what's below. Call before you dig.

1-800-482-7171 CALL TOLL FREE

PRELIMINARY NOT FOR CONSTRUCTION

NO.	DATE	REVISIONS	BY	CHK	APP'D
B	12-10-18	PRELIMINARY CDs	AML	MJA	
A	11-02-18	LEASE EXHIBIT	MLM	MJA	

MISSION 1 COMMUNICATIONS
6202 Constitution Drive, Suite C
Fort Wayne, IN 46804

PYRAMID Network Services, LLC

MOTOROLA SOLUTIONS

SITE LOCATION PLAN

MOORE PARK
E MOORE PARK TRAIL
BAILEY, MI 49303

C-1

THIS DRAWING IS COPYRIGHTED AND IS THE SOLE PROPERTY OF THE OWNER. IT IS PRODUCED SOLELY FOR USE BY THE OWNER AND ITS AFFILIATES. REPRODUCTION OR USE OF THIS DRAWING AND/OR THE INFORMATION CONTAINED IN IT IS FORBIDDEN WITHOUT THE WRITTEN PERMISSION OF THE OWNER.

ITS IS A VIOLATION OF LAW FOR ANY PERSON, UNLESS THEY ARE ACTING UNDER THE DIRECTION OF A LICENSED PROFESSIONAL ENGINEER, TO ALTER THIS DOCUMENT.

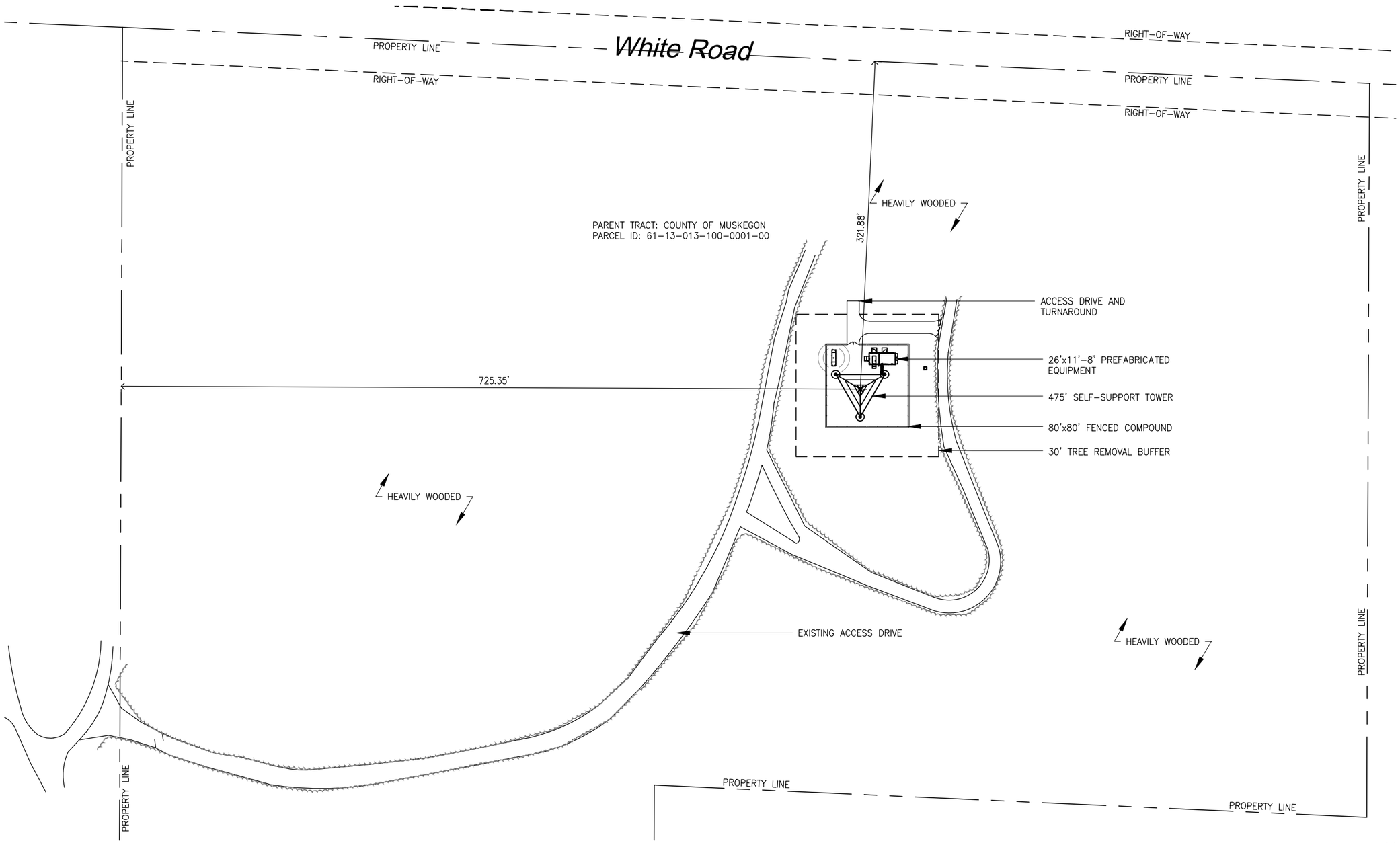

GENERAL NOTES:

1. PROPERTY OFFSETS ARE APPROXIMATE. FINAL LOCATION OF COMPOUND TO BE DEVELOPED FROM TOWER ℄

2. THE LOCATION, SIZE & TYPE OF MATERIAL OF EXISTING UTILITIES INDICATED ON THE PLANS IS NOT REPRESENTED AS BEING ACCURATE, SUFFICIENT OR COMPLETE. IT SHALL BE THE CONTRACTOR'S RESPONSIBILITY TO DETERMINE THE ACTUAL LOCATION OF ALL SUCH FACILITIES, INCLUDING THE SERVICE CONNECTIONS TO UNDERGROUND UTILITIES. PRIOR TO CONSTRUCTION THE CONTRACTOR SHALL NOTIFY THE UTILITY COMPANIES OF HIS OPERATIONAL PLANS & SHALL OBTAIN FROM THE RESPECTIVE UTILITY COMPANIES DETAILED INFORMATION & ASSISTANCE RELATIVE TO THE LOCATION OF THEIR FACILITIES & THE WORKING SCHEDULE OF THE COMPANIES FOR REMOVAL OR ADJUSTMENT WHERE REQUIRED. IN THE EVENT AN UNEXPECTED UTILITY INTERFERENCE IS ENCOUNTERED DURING CONSTRUCTION, THE CONTRACTOR SHALL IMMEDIATELY NOTIFY THE UTILITY COMPANY OF JURISDICTION. THE ENGINEER SHALL ALSO BE IMMEDIATELY NOTIFIED. ANY SUCH MAINS & SERVICES SHALL BE RESORTED TO SERVICE AT ONCE & PAID FOR BY THE CONTRACTOR AT NO ADDITIONAL COST TO THE CONTRACT.

3. ALL CONSTRUCTION ACTIVITIES & MODIFICATIONS SHALL COMPLY WITH MOTOROLA R-56 STANDARDS, MOST CURRENT REVISION.

ANY DISCREPANCIES BETWEEN THIS DRAWING PACKAGE AND EXISTING FIELD CONDITIONS MUST BE REPORTED TO THE ENGINEER OF RECORD PRIOR TO THE COMMENCEMENT OF CONSTRUCTION.

Overall Site Plan

NORTH

50 0 50 100

1 inch = 100ft.

811 Know what's **below.** **Call** before you dig.

1-800-482-7171
CALL TOLL FREE

PRELIMINARY NOT FOR CONSTRUCTION

NO.	DATE	REVISIONS	BY	CHK	APP'D
B	12-10-18	PRELIMINARY CDs	AML	MJA	
A	11-02-18	LEASE EXHIBIT	MLM	MJA	

MISSION 1 COMMUNICATIONS
6202 Constitution Drive, Suite C
Fort Wayne, IN 46804

PYRAMID Network Services, LLC

MOTOROLA SOLUTIONS

OVERALL SITE PLAN

MOORE PARK
E MOORE PARK TRAIL
BAILEY, MI 49303

C-2

THIS DRAWING IS COPYRIGHTED AND IS THE SOLE PROPERTY OF THE OWNER. IT IS PRODUCED SOLELY FOR USE BY THE OWNER AND ITS AFFILIATES. REPRODUCTION OR USE OF THIS DRAWING AND/OR THE INFORMATION CONTAINED IN IT IS FORBIDDEN WITHOUT THE WRITTEN PERMISSION OF THE OWNER.

ITS IS A VIOLATION OF LAW FOR ANY PERSON, UNLESS THEY ARE ACTING UNDER THE DIRECTION OF A LICENSED PROFESSIONAL ENGINEER, TO ALTER THIS DOCUMENT.

GENERAL NOTES:

1. PROPERTY OFFSETS ARE APPROXIMATE. FINAL LOCATION OF COMPOUND TO BE DEVELOPED FROM TOWER ℄

2. THE LOCATION, SIZE & TYPE OF MATERIAL OF EXISTING UTILITIES INDICATED ON THE PLANS IS NOT REPRESENTED AS BEING ACCURATE, SUFFICIENT OR COMPLETE. IT SHALL BE THE CONTRACTOR'S RESPONSIBILITY TO DETERMINE THE ACTUAL LOCATION OF ALL SUCH FACILITIES, INCLUDING THE SERVICE CONNECTIONS TO UNDERGROUND UTILITIES. PRIOR TO CONSTRUCTION THE CONTRACTOR SHALL NOTIFY THE UTILITY COMPANIES OF HIS OPERATIONAL PLANS & SHALL OBTAIN FROM THE RESPECTIVE UTILITY COMPANIES DETAILED INFORMATION & ASSISTANCE RELATIVE TO THE LOCATION OF THEIR FACILITIES & THE WORKING SCHEDULE OF THE COMPANIES FOR REMOVAL OR ADJUSTMENT WHERE REQUIRED. IN THE EVENT AN UNEXPECTED UTILITY INTERFERENCE IS ENCOUNTERED DURING CONSTRUCTION, THE CONTRACTOR SHALL IMMEDIATELY NOTIFY THE UTILITY COMPANY OF JURISDICTION. THE ENGINEER SHALL ALSO BE IMMEDIATELY NOTIFIED. ANY SUCH MAINS & SERVICES SHALL BE RESORTED TO SERVICE AT ONCE & PAID FOR BY THE CONTRACTOR AT NO ADDITIONAL COST TO THE CONTRACT.

3. ALL CONSTRUCTION ACTIVITIES & MODIFICATIONS SHALL COMPLY WITH MOTOROLA R-56 STANDARDS, MOST CURRENT REVISION.

ANY DISCREPANCIES BETWEEN THIS DRAWING PACKAGE AND EXISTING FIELD CONDITIONS MUST BE REPORTED TO THE ENGINEER OF RECORD PRIOR TO THE COMMENCEMENT OF CONSTRUCTION.

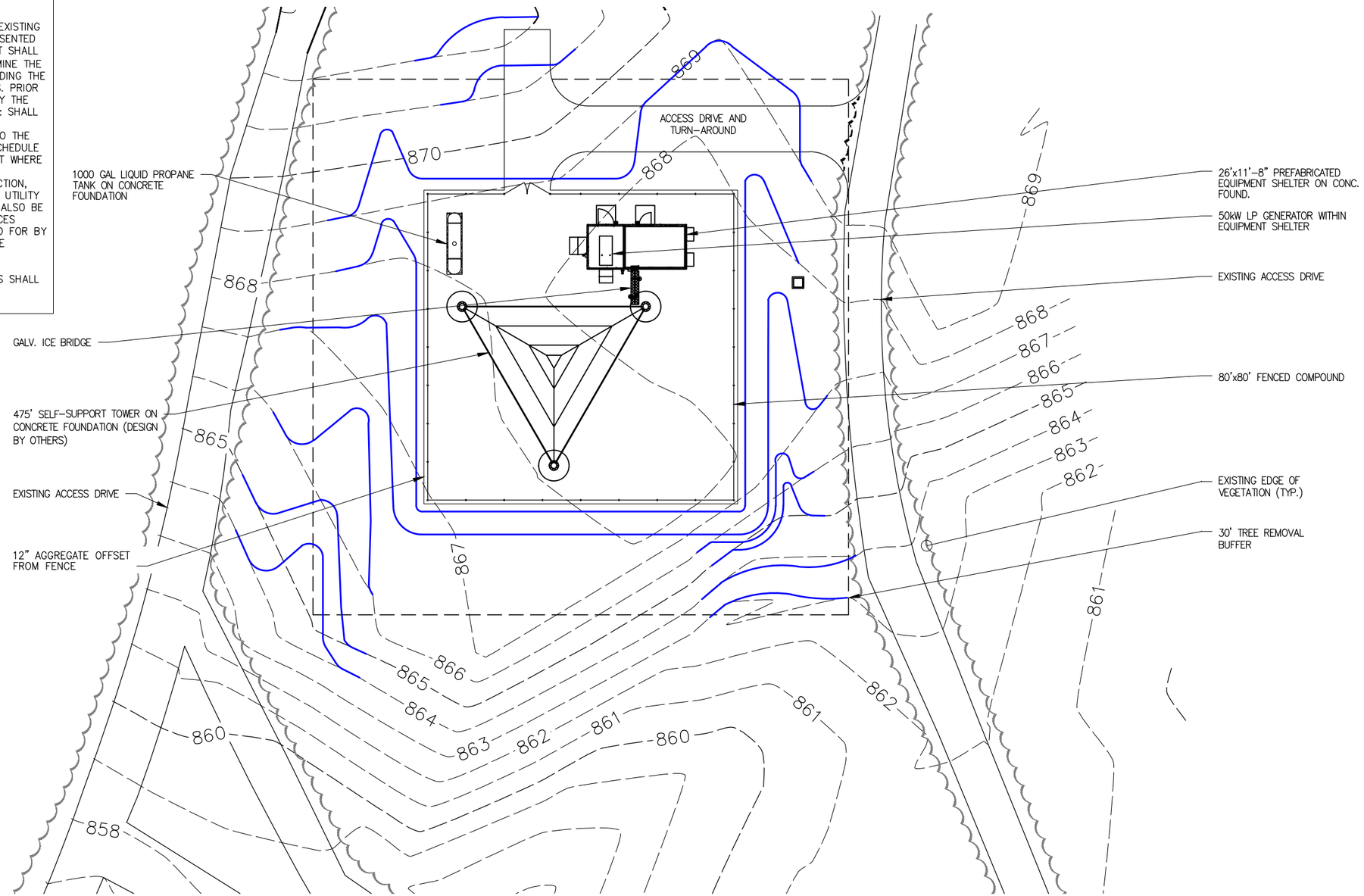

Contour Legend:

+XXX.X SPOT ELEVATION – SUBGRADE (FINISH GRADE OF SITE = 0.67' ABOVE SUBGRADE)

EXIST. CONTOUR – MINOR

EXIST. CONTOUR – MAJOR

NEW CONTOUR

Grading Plan

NORTH

15' 0 15' 30'

1 inch = 30ft.

811 Know what's below. Call before you dig.

1-800-482-7171 CALL TOLL FREE

PRELIMINARY NOT FOR CONSTRUCTION

NO.	DATE	REVISIONS	BY	CHK	APP'D
B	12-10-18	PRELIMINARY CDs	AML	MJA	
A	11-02-18	LEASE EXHIBIT	MLM	MJA	

MISSION 1 COMMUNICATIONS
6202 Constitution Drive, Suite C
Fort Wayne, IN 46804

PYRAMID Network Services, LLC

MOTOROLA SOLUTIONS

GRADING PLAN

MOORE PARK
E MOORE PARK TRAIL
BAILEY, MI 49303

C-2.1

THIS DRAWING IS COPYRIGHTED AND IS THE SOLE PROPERTY OF THE OWNER. IT IS PRODUCED SOLELY FOR USE BY THE OWNER AND ITS AFFILIATES. REPRODUCTION OR USE OF THIS DRAWING AND/OR THE INFORMATION CONTAINED IN IT IS FORBIDDEN WITHOUT THE WRITTEN PERMISSION OF THE OWNER.

ITS IS A VIOLATION OF LAW FOR ANY PERSON, UNLESS THEY ARE ACTING UNDER THE DIRECTION OF A LICENSED PROFESSIONAL ENGINEER, TO ALTER THIS DOCUMENT.

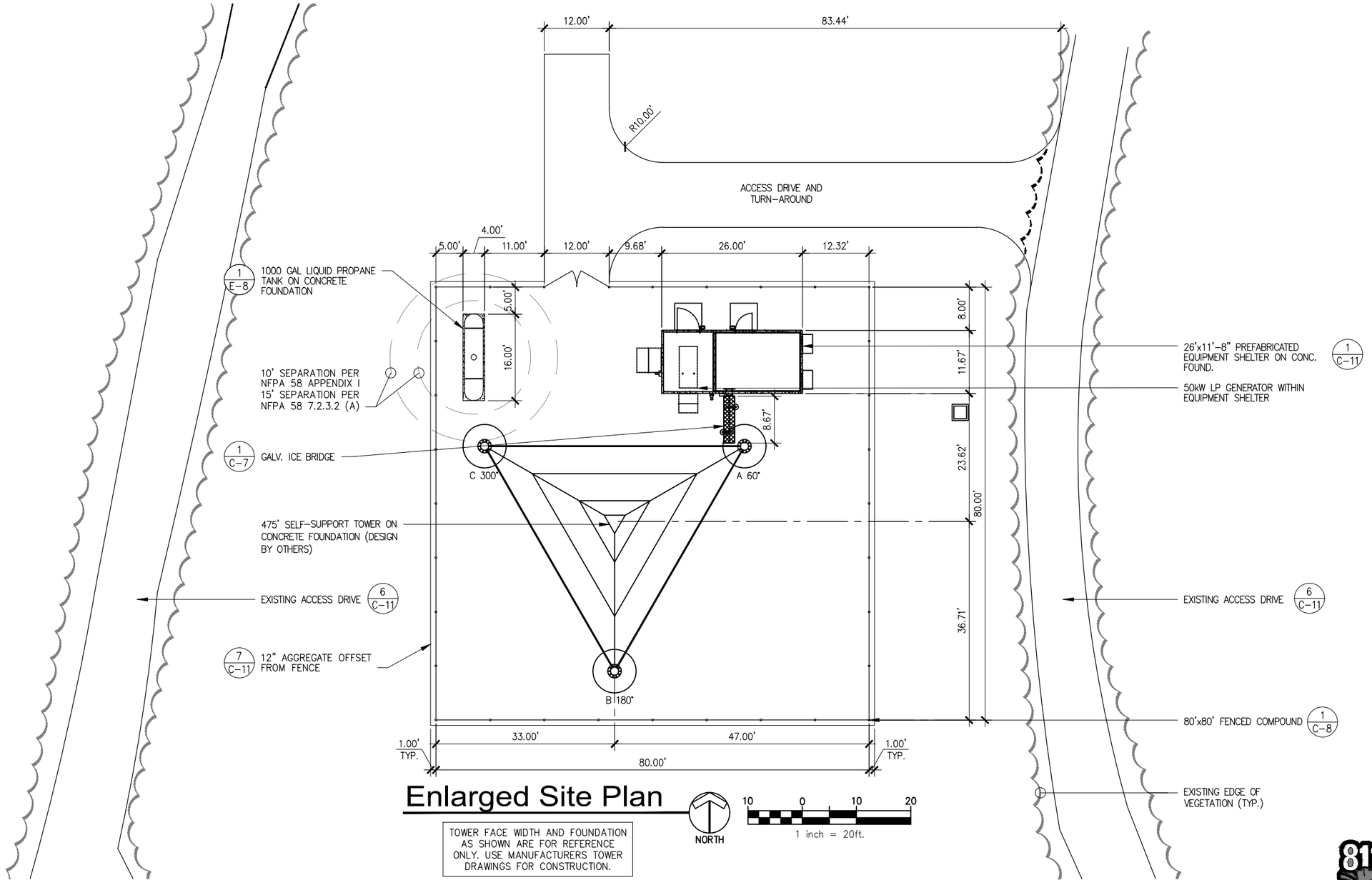

Enlarged Site Plan

TOWER FACE WIDTH AND FOUNDATION AS SHOWN ARE FOR REFERENCE ONLY. USE MANUFACTURERS TOWER DRAWINGS FOR CONSTRUCTION.

Know what's **below.** **Call** before you dig.

1-800-482-7171
CALL TOLL FREE

PRELIMINARY NOT FOR CONSTRUCTION

NO.	DATE	REVISIONS	BY	CHK	APP'D
B	12-10-18	PRELIMINARY CDs	AML	MJA	
A	11-02-18	LEASE EXHIBIT	MLM	MJA	

MISSION 1 COMMUNICATIONS
6202 Constitution Drive, Suite C
Fort Wayne, IN 46804

PYRAMID Network Services, LLC

MOTOROLA SOLUTIONS

ENLARGED SITE PLAN

MOORE PARK
E MOORE PARK TRAIL
BAILEY, MI 49303

C-3

THIS DRAWING IS COPYRIGHTED AND IS THE SOLE PROPERTY OF THE OWNER. IT IS PRODUCED SOLELY FOR USE BY THE OWNER AND ITS AFFILIATES. REPRODUCTION OR USE OF THIS DRAWING AND/OR THE INFORMATION CONTAINED IN IT IS FORBIDDEN WITHOUT THE WRITTEN PERMISSION OF THE OWNER.

ITS IS A VIOLATION OF LAW FOR ANY PERSON, UNLESS THEY ARE ACTING UNDER THE DIRECTION OF A LICENSED PROFESSIONAL ENGINEER, TO ALTER THIS DOCUMENT.

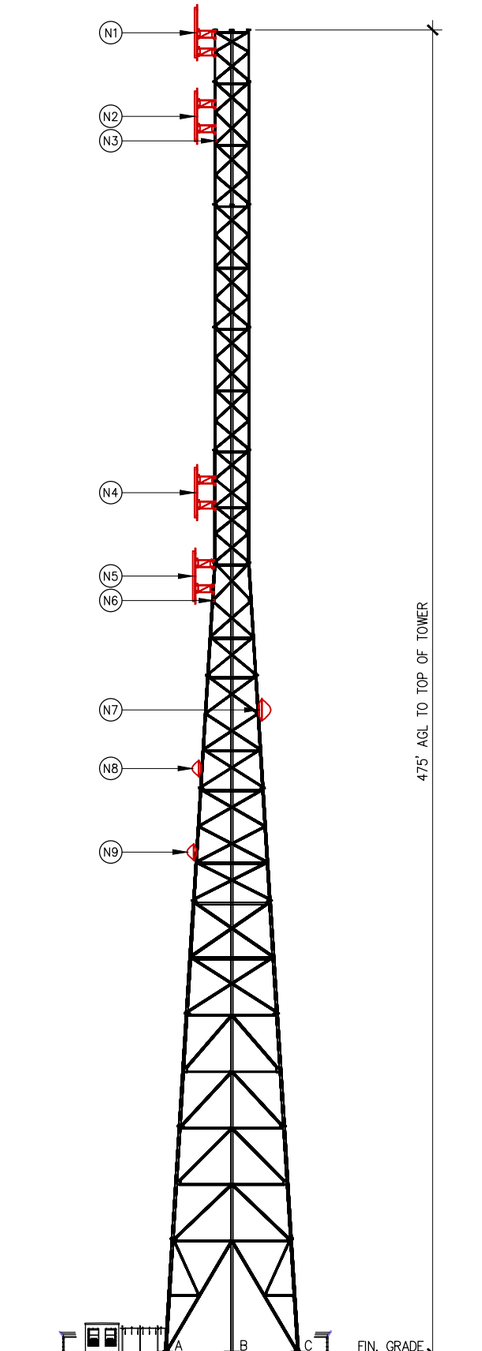

1 Tower Elevation

NOT TO SCALE

MOORE PARK - 475' TOWER
LAT: 43° 48' 27.7"
LON: - 85° 15' 45.6"

Antenna/Appurtenance Location Chart

E = EXISTING
N = NEW
F = FUTURE

ANTENNA INFORMATION												FEEDLINE INFORMATION				
ANTENNA ID	MANUFACTURER	MODEL	TYPE	LENGTH	BOTTOM ELEV	RAD CENTER	TOP ELEV.	MOUNT TYPE	TOWER LEG	AZIMUTH	QTY.	TYPE	MANUFACTURER	MODEL	SIZE	QTY.
N1	SINCLAIR	SE4192	TX	18.0'	465.0'	474.0'	483.0'	SECTOR FRAME	A	90°	3	COAX	TBD	TBD	TBD	3
N2	SINCLAIR	SE4192	RX	18.0'	435.0'	444.0'	453.0'	SECTOR FRAME	A	90°	2	COAX	TBD	TBD	TBD	2
N3	-	-	TTA	-	435.0'	-	-	TOWER LEG	A	N/A	2	COAX	TBD	TBD	TBD	2
N4	SINCLAIR	SE4192	TX	18.0'	300.0'	309.0'	318.0'	SECTOR FRAME	A	90°	2	COAX	TBD	TBD	TBD	2
N5	SINCLAIR	SE4192	RX	18.0'	270.0'	279.0'	288.0'	STANDOFF	A	90°	1	COAX	TBD	TBD	TBD	1
N6	-	-	TTA	-	270.0'	-	-	TOWER LEG	A	N/A	1	COAX	TBD	TBD	TBD	1
N7	TBD	TBD	MW	8.0'	227.0'	231.0'	235.0'	R5	C	270°	1	COAX	TBD	TBD	TBD	1
N8	TBD	TBD	MW	6.0'	207.0'	210.0'	213.0'	R5	A	107°	1	COAX	TBD	TBD	TBD	1
N9	TBD	TBD	MW	6.0'	177.0'	180.0'	183.0'	R5	A	107°	1	COAX	TBD	TBD	TBD	1
	REFER TO TOWER MANUFACTURER DRAWINGS FOR BEACON AND OBSTRUCTION LIGHTING HEIGHTS															

GENERAL NOTES:

1. MISSION 1 COMMUNICATIONS HAS NOT COMPLETED A STRUCTURAL ANALYSIS FOR THE EXISTING OR LOADING OF ANY STRUCTURES AT THIS TIME. FINAL STRUCTURAL ANALYSIS TO BE COMPLETED BY OTHERS PRIOR TO CONSTRUCTION ACTIVITIES COMMENCE.

2. ALL VERTICAL TRANSMISSION LINE RUNS FROM THE ANTENNAS SHALL BE GROUNDED NEAR THE TOP & BOTTOM OF THE TOWER(BEFORE THE CABLE MAKES HORIZONTAL TRANSITION & NEAR ENTRY PORT ON THE SHELTER). ADDITIONAL TRANSMISSION LINE GROUND KITS SHALL BE INSTALLED AS NEEDED TO LIMIT THE DISTANCE BETWEEN GROUND KITS TO 75 FEET.

3. THE CONTRACTOR SHALL CONDUCT A TDR SWEEP TEST ON ALL THE NEWLY INSTALLED TRANSMISSION LINES TO DETERMINE THE CABLE CONDUCTOR RESISTANCE. CABLE INSERTION LOSS, REFLECTION & STIMULUS RESPONSE MEASUREMENTS. RESULTS TO BE SUBMITTED TO MOTOROLA.

4. DRIP LOOPS SHALL BE INCORPORATED IN CABLE RUNS TO PREVENT WATER FROM TRICKLING DOWN THE LINES INTO THE SHELTER.

5. ALL TRANSMISSION LINES SHALL BE MARKED WITH APPROPRIATE COLOR TAPE BANDS (ONE INCH WIDE COLOR TAPE) FOR IDENTIFICATION NEAR THE ANTENNA. JUST BEFORE ENTERING THE SHELTER AS WELL AS INSIDE THE SHELTER, BEFORE CONNECTING TO THE SURGE SUPPRESSORS. SEE EQUIPMENT & COAXIAL CABLE SCHEDULE FOR COLOR CODING SCHEME.

PRELIMINARY NOT FOR CONSTRUCTION

NO.	DATE	REVISIONS	BY	CHK	APP'D
B	12-10-18	PRELIMINARY CDs	AML	MJA	
A	11-02-18	LEASE EXHIBIT	MLM	MJA	

MISSION 1 COMMUNICATIONS
6202 Constitution Drive, Suite C
Fort Wayne, IN 46804

PYRAMID Network Services, LLC

MOTOROLA SOLUTIONS

TOWER ELEVATION AND ANTENNA INFORMATION

MOORE PARK
E MOORE PARK TRAIL
BAILEY, MI 49303

C-4

THIS DRAWING IS COPYRIGHTED AND IS THE SOLE PROPERTY OF THE OWNER. IT IS PRODUCED SOLELY FOR USE BY THE OWNER AND ITS AFFILIATES. REPRODUCTION OR USE OF THIS DRAWING AND/OR THE INFORMATION CONTAINED IN IT IS FORBIDDEN WITHOUT THE WRITTEN PERMISSION OF THE OWNER.

ITS IS A VIOLATION OF LAW FOR ANY PERSON, UNLESS THEY ARE ACTING UNDER THE DIRECTION OF A LICENSED PROFESSIONAL ENGINEER, TO ALTER THIS DOCUMENT.

NOTES:

1. ANTENNAS, CONNECTORS, JUMPERS, TRANSMISSION LINES, TO BE FURNISHED BY MOTOROLA, AND INSTALLED BY CONTRACTOR.
2. CONTRACTOR TO USE STRAIN RELIEF EVERY 200 FEET (MIN.) FOR TRANSMISSION LINES. TO BE INSTALLED BEFORE INSTALLATION OF TRANSMISSION LINES.
3. CONTRACTOR TO WATERPROOF ALL EXTERNAL CONNECTIONS.
4. CONTRACTOR TO INSTALL GALVANIZED OR STAINLESS STEEL MOUNTING HARDWARE.
5. CONTRACTOR TO ATTACH CABLES TO TOWER EVERY 3 FOOT (MAX.)
6. CONTRACTOR SHALL PERFORM A SWEEP TEST ON TRANSMISSION AND TEST LINES PRIOR TO INSTALLATION. IMMEDIATELY NOTIFY MOTOROLA OF ANY LINE DEFICIENCIES.
7. ALL VERTICAL TRANSMISSION LINE RUNS FROM THE ANTENNAS WILL BE GROUNDED NEAR THE TOP & BOTTOM OF THE TOWER(BEFORE THE CABLE MAKES HORIZONTAL TRANSITION & NEAR ENTRY PORT ON THE SHELTER). TRANSMISSION LINE GROUND KITS WILL BE INSTALLED EVERY 50 TO 75 FEET.
8. VERIFY IN FIELD OR REVIEW THE TOWER STRUCTURAL ANALYSIS FOR MEMBER SIZE PRIOR TO ORDERING ANTENNA MOUNTS.
9. CONTRACTOR SHALL VERIFY THE RF CONFIGURATION & STRUCTURAL ANALYSIS BEFORE INSTALLATION.

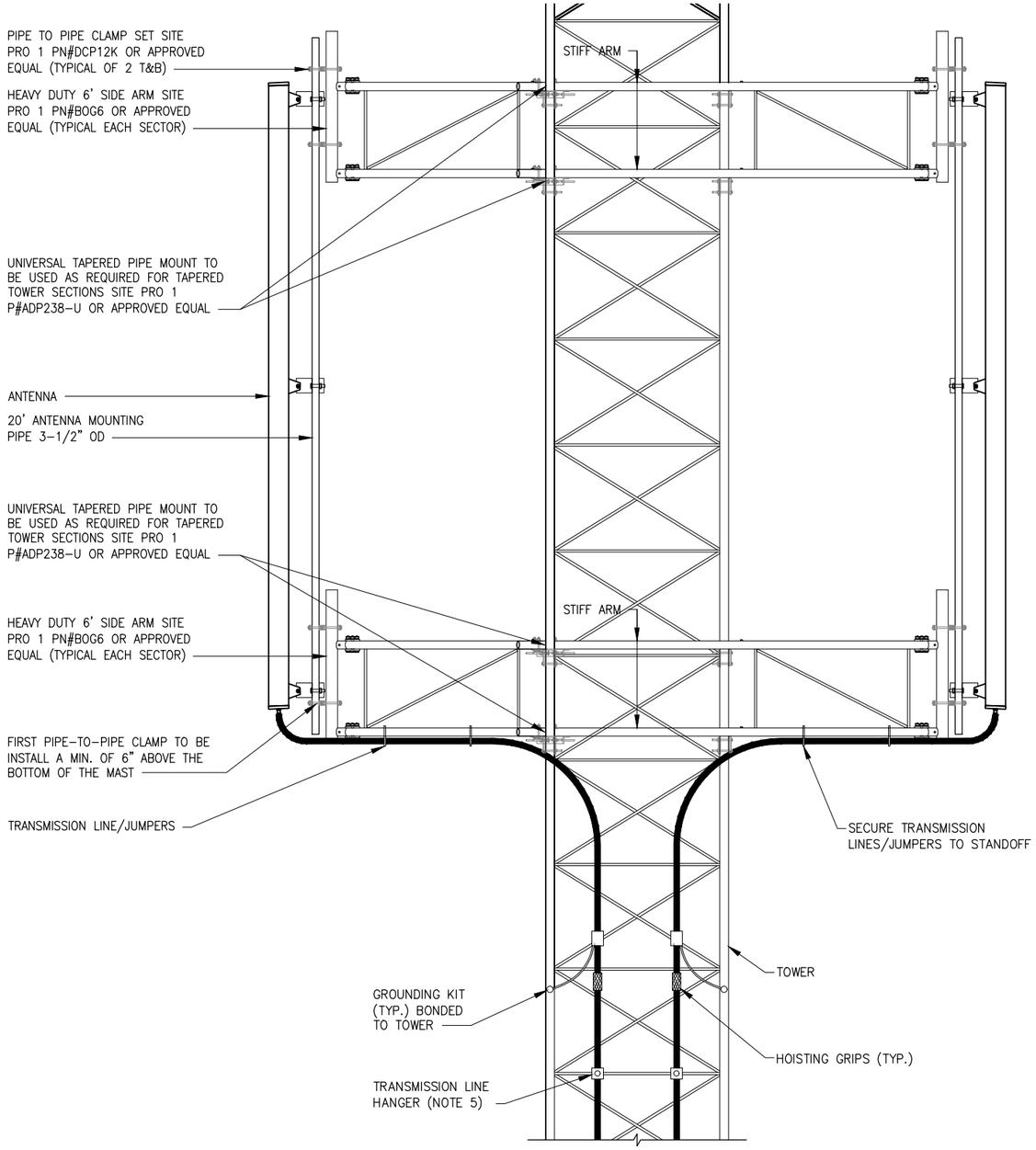

1 Antenna Detail - Stand-off Mount

NOT TO SCALE

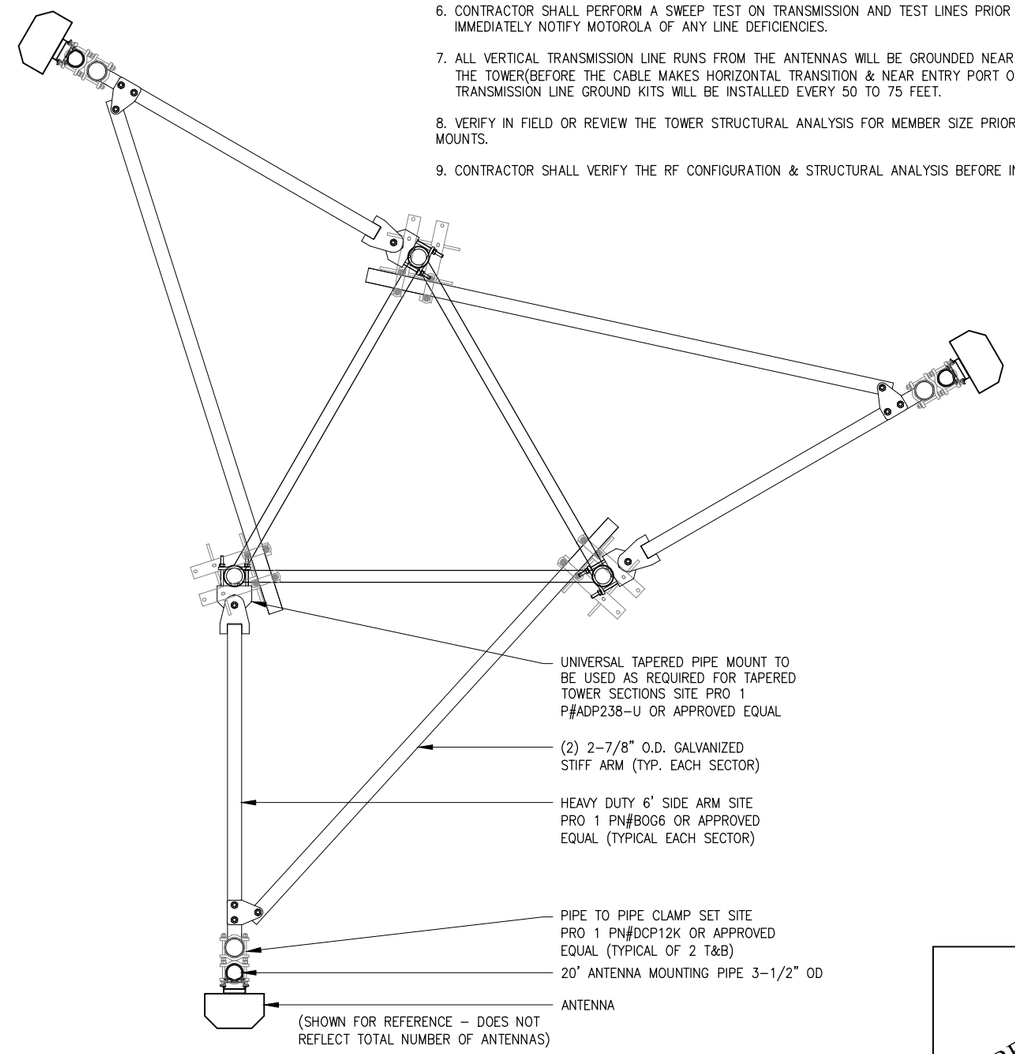

2 Heavy Duty 6' Side Arm Antenna Mount

NOT TO SCALE

PRELIMINARY NOT FOR CONSTRUCTION

NO.	DATE	REVISIONS	BY	CHK	APP'D
B	12-10-18	PRELIMINARY CDs	AML	MJA	
A	11-02-18	LEASE EXHIBIT	MLM	MJA	

MISSION 1 COMMUNICATIONS
6202 Constitution Drive, Suite C
Fort Wayne, IN 46804

PYRAMID Network Services, LLC

MOTOROLA SOLUTIONS

ANTENNA INFORMATION

MOORE PARK
E MOORE PARK TRAIL
BAILEY, MI 49303

C-5

THIS DRAWING IS COPYRIGHTED AND IS THE SOLE PROPERTY OF THE OWNER. IT IS PRODUCED SOLELY FOR USE BY THE OWNER AND ITS AFFILIATES. REPRODUCTION OR USE OF THIS DRAWING AND/OR THE INFORMATION CONTAINED IN IT IS FORBIDDEN WITHOUT THE WRITTEN PERMISSION OF THE OWNER.

ITS IS A VIOLATION OF LAW FOR ANY PERSON, UNLESS THEY ARE ACTING UNDER THE DIRECTION OF A LICENSED PROFESSIONAL ENGINEER, TO ALTER THIS DOCUMENT.

NOTES:

1. VERIFY IN FIELD OR REVIEW THE TOWER STRUCTURAL ANALYSIS FOR MEMBER SIZE PRIOR TO ORDERING ANTENNA MOUNTS.

2. CONTRACTOR SHALL VERIFY THE RF CONFIGURATION & STRUCTURAL ANALYSIS BEFORE INSTALLATION.

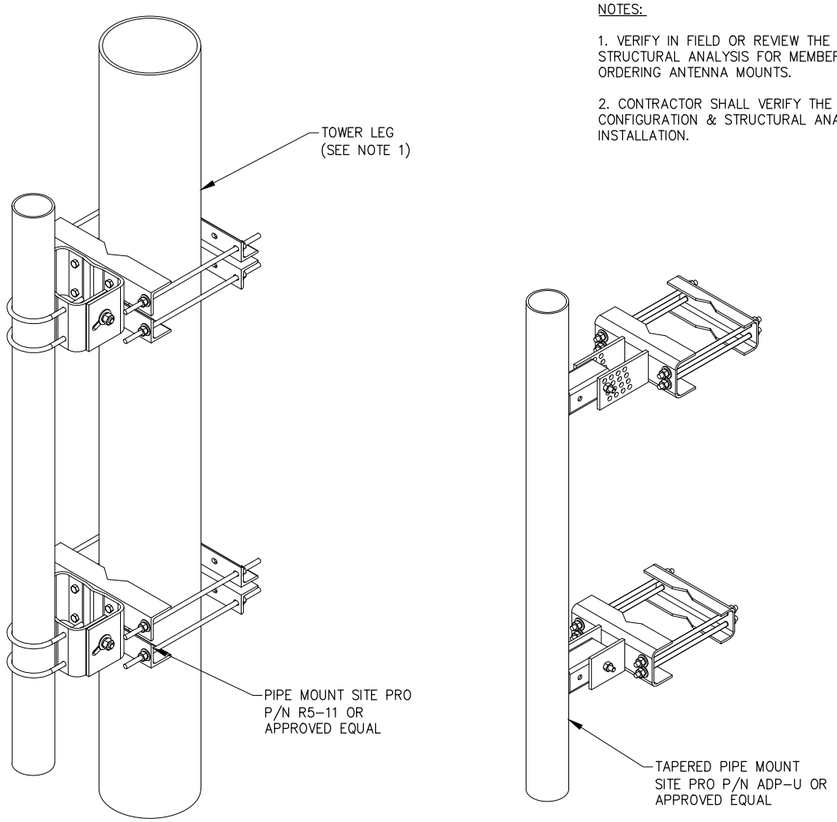

1 Microwave Dish Mounts

NOT TO SCALE

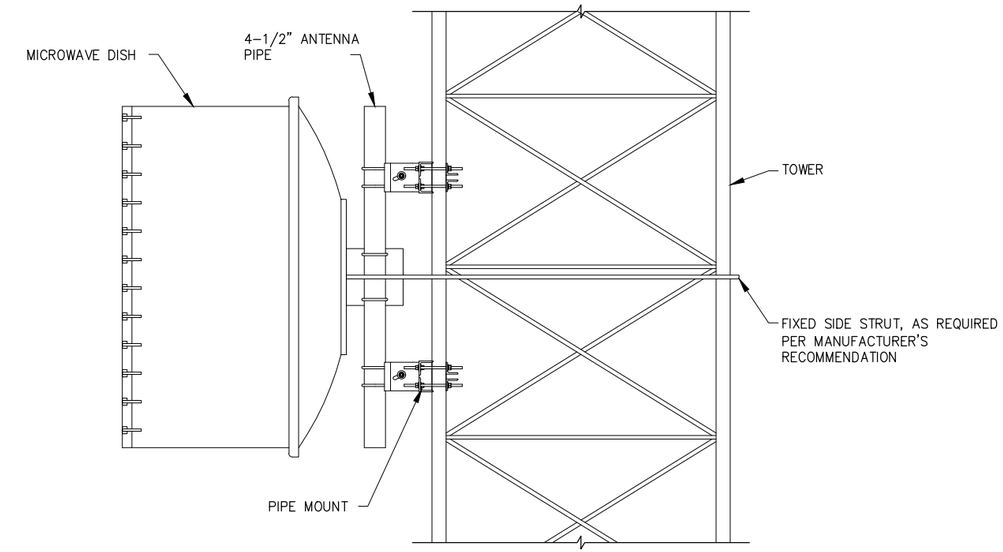

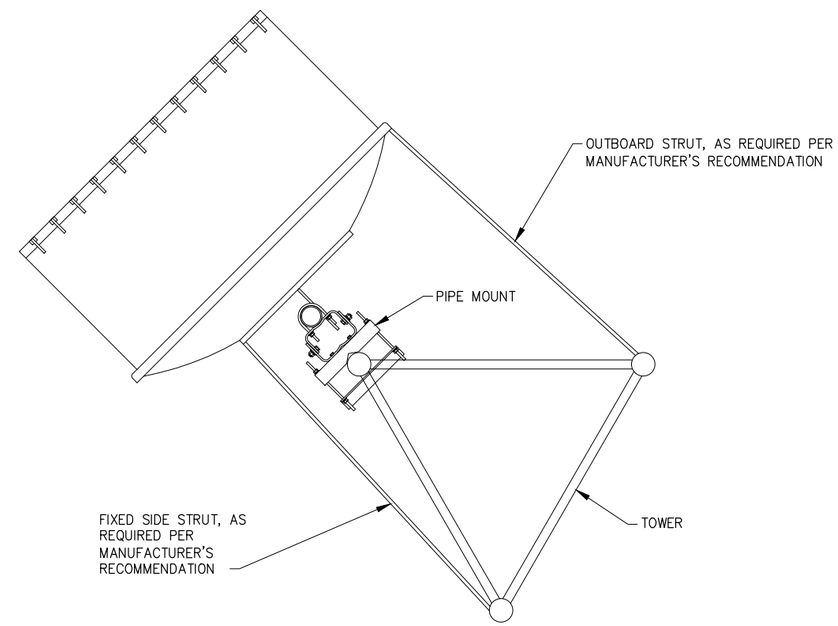

2 Microwave Dish Mounting

NOT TO SCALE

PRELIMINARY
NOT FOR
CONSTRUCTION

NO.	DATE	REVISIONS	BY	CHK	APP'D
B	12-10-18	PRELIMINARY CDs	AML	MJA	
A	11-02-18	LEASE EXHIBIT	MLM	MJA	

MISSION 1 COMMUNICATIONS
6202 Constitution Drive, Suite C
Fort Wayne, IN 46804

PYRAMID Network Services, LLC

MOTOROLA SOLUTIONS

ANTENNA INFORMATION

MOORE PARK
E MOORE PARK TRAIL
BAILEY, MI 49303

C-6

THIS DRAWING IS COPYRIGHTED AND IS THE SOLE PROPERTY OF THE OWNER. IT IS PRODUCED SOLELY FOR USE BY THE OWNER AND ITS AFFILIATES. REPRODUCTION OR USE OF THIS DRAWING AND/OR THE INFORMATION CONTAINED IN IT IS FORBIDDEN WITHOUT THE WRITTEN PERMISSION OF THE OWNER.

ITS IS A VIOLATION OF LAW FOR ANY PERSON, UNLESS THEY ARE ACTING UNDER THE DIRECTION OF A LICENSED PROFESSIONAL ENGINEER, TO ALTER THIS DOCUMENT.

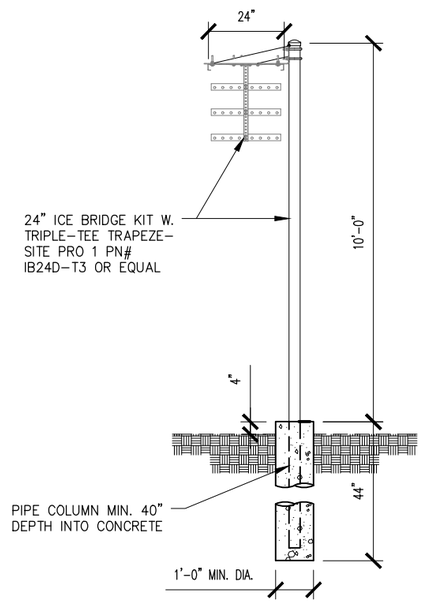

1 Ice Bridge Section

SCALE: 1/4" = 1'-0"

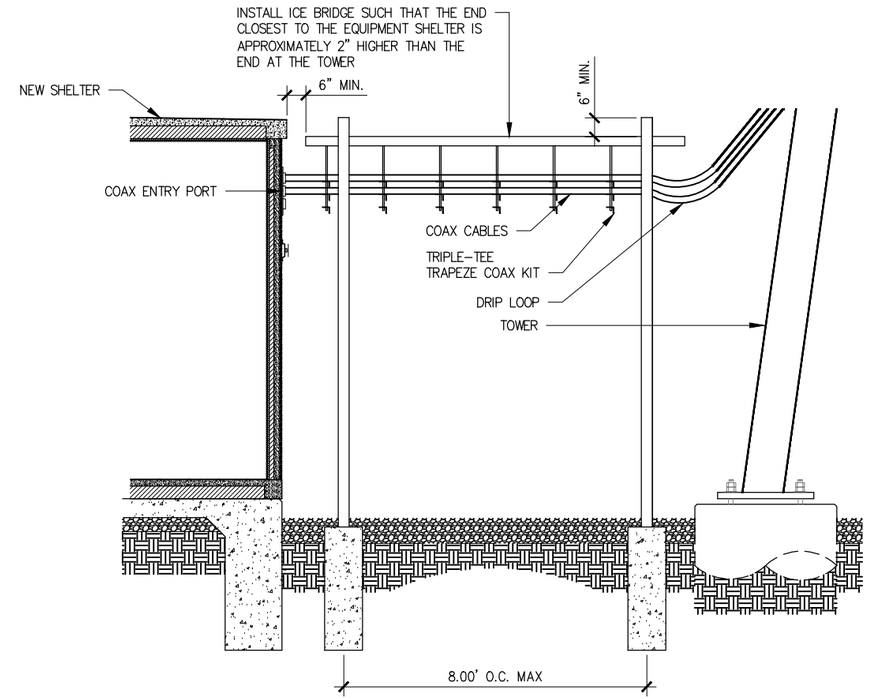

2 Ice Bridge Side Elevation

SCALE: 1/4" = 1'-0"

ICE BRIDGE NOTES:

1. MAXIMUM ALLOWABLE DISTANCE BETWEEN SUPPORTS ON A CONTINUOUS SINGLE SECTION OF BRIDGE CHANNEL SHALL BE 8 FEET FOR 10 FEET BRIDGE CHANNEL
2. WHEN SPLICING BRIDGE CHANNEL SECTIONS, THE SPLICE SHOULD BE PROVIDED AT THE SUPPORT, IF POSSIBLE, OR AT A MAXIMUM OF 2' FROM THE SUPPORT.
3. SUPPORT SHOULD BE PROVIDED AS CLOSE AS POSSIBLE TO THE ENDS OF ICE BRIDGES, WITH A MAXIMUM CANTILEVER DISTANCE OF 2' FROM THE SUPPORT TO THE FREE END OF THE ICE BRIDGE.
4. CUT BRIDGE CHANNEL SECTIONS SHALL HAVE RAW EDGES TREATED WITH A MATERIAL TO RESTORE THESE EDGES TO THE ORIGINAL CHANNEL, OR EQUIVALENT, FINISH.
5. ICE BRIDGES MAY BE CONSTRUCTED WITH COMPONENTS FROM OTHER MANUFACTURERS, PROVIDED THE MANUFACTURERS INSTALLATION GUIDELINES ARE FOLLOWED AND THEIR PRODUCT IS CONSIDERED AN EQUAL OR BETTER.
6. DEVIATIONS FROM STANDARDS FOR COMPONENT INSTALLATIONS ARE PERMITTED WITH THE RESPECTIVE MANUFACTURER'S APPROVAL
7. DEVIATIONS FROM ICE BRIDGE FOUNDATIONS REQUIRE ENGINEERING APPROVAL. THE DESIGN IS BASED ON ASCE 7-98, SECOND GUST WIND SPEED OF 110 MPH, EXPOSURE C, ELEVATION AT GRADE. THIS DESIGN IS BASED ON A 24" WIDE ICE BRIDGE & (12) 1-1/5" ø CABLES & MAX. POST SUPPORT SPACING OF 10'-0" O.C.

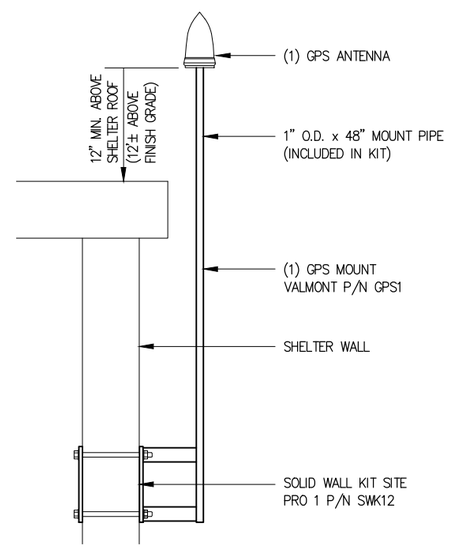

3 GPS Antenna Mounting Detail

SCALE: 3/4" = 1'-0"

NOTE:
CONTRACTOR TO SUPPLY AND INSTALL GPS, GPS MOUNT, CABLE, CONNECTORS, ETC

PRELIMINARY NOT FOR CONSTRUCTION

NO.	DATE	REVISIONS	BY	CHK	APP'D
B	12-10-18	PRELIMINARY CDs	AML	MJA	
A	11-02-18	LEASE EXHIBIT	MLM	MJA	

MISSION 1 COMMUNICATIONS
6202 Constitution Drive, Suite C
Fort Wayne, IN 46804

PYRAMID Network Services, LLC

MOTOROLA SOLUTIONS

ICE BRIDGE DETAILS

MOORE PARK
E MOORE PARK TRAIL
BAILEY, MI 49303

C-7

THIS DRAWING IS COPYRIGHTED AND IS THE SOLE PROPERTY OF THE OWNER. IT IS PRODUCED SOLELY FOR USE BY THE OWNER AND ITS AFFILIATES. REPRODUCTION OR USE OF THIS DRAWING AND/OR THE INFORMATION CONTAINED IN IT IS FORBIDDEN WITHOUT THE WRITTEN PERMISSION OF THE OWNER.

ITS IS A VIOLATION OF LAW FOR ANY PERSON, UNLESS THEY ARE ACTING UNDER THE DIRECTION OF A LICENSED PROFESSIONAL ENGINEER, TO ALTER THIS DOCUMENT.

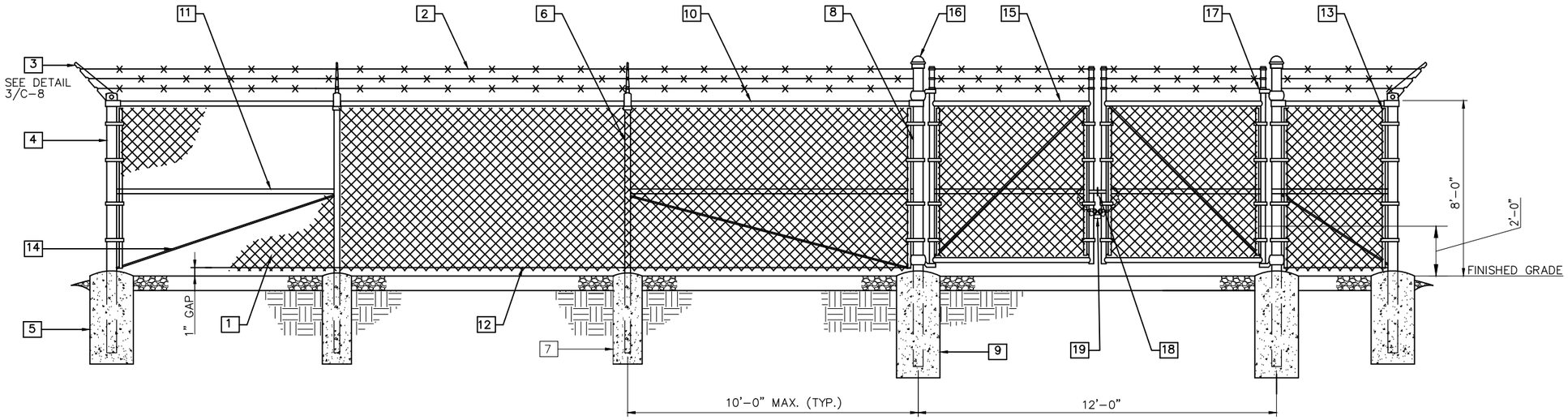

1 Typical Fence Elevation

SCALE: 1/4" = 1'-0"

Keynote Legend

1. FABRIC: 9 GAUGE, 2" MESH, ASTM A392 (SEE FENCE SECTION FOR HEIGHT).
2. BARBED WIRE: 12 GAUGE WIRE, 4 POINT (3 RUNS), FINISH TO MATCH FABRIC, ASTM A121.
3. EXTENSION ARMS: STAMPED STEEL WITH MALLEABLE IRON BASE, FINISH TO MATCH FENCE FRAMEWORK, ASTM F626.
4. END AND CORNER POSTS: 3"ø PIPE SCH. 40 (GALV.) ASTM F1083
5. CONCRETE FOUNDATION: 36"x12"ø (3000 PSI)
6. LINE POSTS: 2"ø PIPE SCH. 40 (GALV.) ASTM F1083
7. CONCRETE FOUNDATION: 36"x10"ø (3000 PSI)
8. GATE POSTS: 4"ø PIPE SCH. 40 (GALV.) ASTM F1083
9. CONCRETE FOUNDATION: 48"x12"ø (3000 PSI)
10. TOP RAIL & BRACE RAIL: 1-1/2"ø PIPE SCH. 40 (GALV.) ASTM F1083
11. MIDDLE RAILS: 1-1/2"ø PIPE SCH. 40 (GALV.) ASTM F1083
12. BOTTOM TENSION WIRE: 0.177"ø METALLIC-COATED STEEL (GALV.), MARCELLED, ASTM A824
13. TENSION BARS: 3/16"x3/4", FULL HEIGHT OF FABRIC, FINISH TO MATCH FENCE FRAMEWORK.
14. TENSION ROD: 3/8"ø WITH ADJ. TIGHTNER, FINISH TO MATCH FENCE FRAMEWORK.
15. GATE FRAME: 2"ø SCH. 40 (GALV.) ASTM F1083
16. POST CAPS: PER POST DIAMETER.
17. GATE HINGES: NON-LIFT-OFF TYPE, OFFSET TO PERMIT 180 DEGREE SWING.
18. DOUBLE GATE LATCH: COMMERCIAL STRONG ARM EQUAL TO: DAC INDUSTRIES 615-C ELEVENTH STREET, GRAND RAPIDS, MI 49504
19. LOCK CHAIN: 3/8" SIZE, 36" LONG HOT DIP GALVANIZED ZINC COATED. W/ MARINE-GRADE PROGRAMMABLE FOUR DIGIT PADLOCK (SESAME BRAND OR APPROVED EQUAL)

NOTES:

1. REFER TO PROJECT SPECIFICATIONS FOR INFORMATION NOT SHOWN IN THE DRAWING.
2. FENCE FABRIC SHALL CONFORM TO CHAIN LINK FENCE MANUFACTURERS INSTITUTE (CLFMI) PRODUCT MANUAL.
3. INSTALL FENCE IN COMPLIANCE WITH ASTM F 567.
4. INSTALL SWING GATES IN COMPLIANCE WITH ASTM F 900.
5. DO NOT BEGIN INSTALLATION AND ERECTION BEFORE FINAL GRADING IS COMPLETED, UNLESS OTHERWISE PERMITTED. INSTALL FENCING ON BOUNDARY LINES INSIDE OF PROPERTY LINE ESTABLISHED BY SURVEY.
6. DRILL OR HAND-EXCAVATE (USING POST – HOLE DIGGER) HOLES FOR POSTS TO DIAMETERS AND SPACINGS INDICATED, IN FIRM, UNDISTURBED OR COMPACTED SOIL. IF NOT INDICATED ON DRAWINGS, EXCAVATE HOLES FOR EACH POST TO MINIMUM DIAMETER RECOMMENDED BY FENCE MANUFACTURER, BUT NOT LESS THAN (4) TIMES LARGEST GROSS-SECTION OF POST.
7. REMOVE POST HOLE SPOILS FROM SITE. DO NOT SET SPOILS ON AGGREGATE WITHOUT ADEQUATE PROTECTION.
8. PROTECT PORTION OF POSTS ABOVE GROUND FROM CONCRETE SPLATTER. PLACE CONCRETE AROUND POSTS AND VIBRATE OR TAMP FOR CONSOLIDATION. CHECK EACH POST FOR VERTICAL AND TOP ALIGNMENT AND HOLD IN POSITION DURING PLACEMENT AND FINISHING OPERATIONS, UNLESS OTHERWISE SHOWN, EXTEND CONCRETE FOOTING 1 INCH ABOVE GRADE AND TROWEL TO A CROWN TO SHED WATER.
9. INSTALL BARBED WIRE IN ACCORDANCE WITH MANUFACTURER'S INSTRUCTIONS.
10. APPLY FABRIC TO OUTSIDE OF FRAMEWORK.

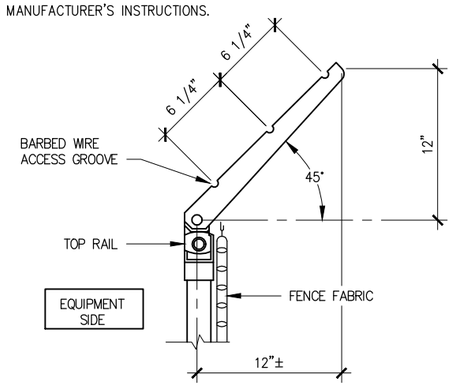

3 Barbed Wire Detail

SCALE: 1" = 1'-0"

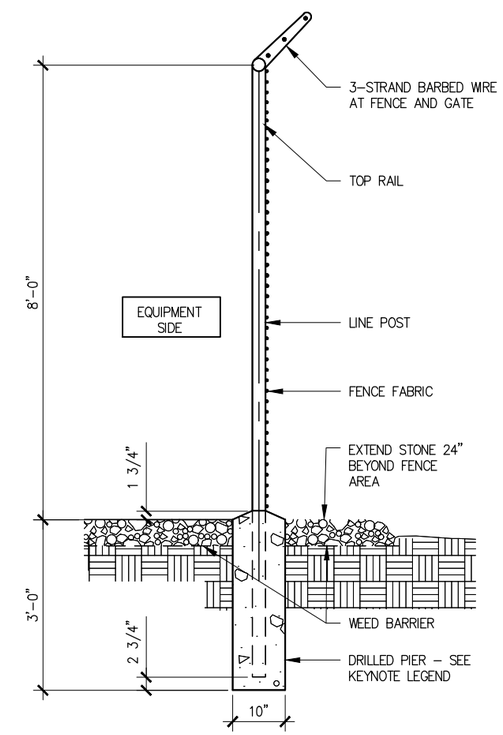

3 Typical Fence Section

SCALE: 3/8" = 1'-0"

PRELIMINARY NOT FOR CONSTRUCTION

NO.	DATE	REVISIONS	BY	CHK	APP'D
B	12-10-18	PRELIMINARY CDs	AML	MJA	
A	11-02-18	LEASE EXHIBIT	MLM	MJA	

MISSION 1 COMMUNICATIONS
6202 Constitution Drive, Suite C
Fort Wayne, IN 46804

PYRAMID Network Services, LLC

MOTOROLA SOLUTIONS

FENCE DETAILS

MOORE PARK
E MOORE PARK TRAIL
BAILEY, MI 49303

C-8

THIS DRAWING IS COPYRIGHTED AND IS THE SOLE PROPERTY OF THE OWNER. IT IS PRODUCED SOLELY FOR USE BY THE OWNER AND ITS AFFILIATES. REPRODUCTION OR USE OF THIS DRAWING AND/OR THE INFORMATION CONTAINED IN IT IS FORBIDDEN WITHOUT THE WRITTEN PERMISSION OF THE OWNER.

ITS IS A VIOLATION OF LAW FOR ANY PERSON, UNLESS THEY ARE ACTING UNDER THE DIRECTION OF A LICENSED PROFESSIONAL ENGINEER, TO ALTER THIS DOCUMENT.

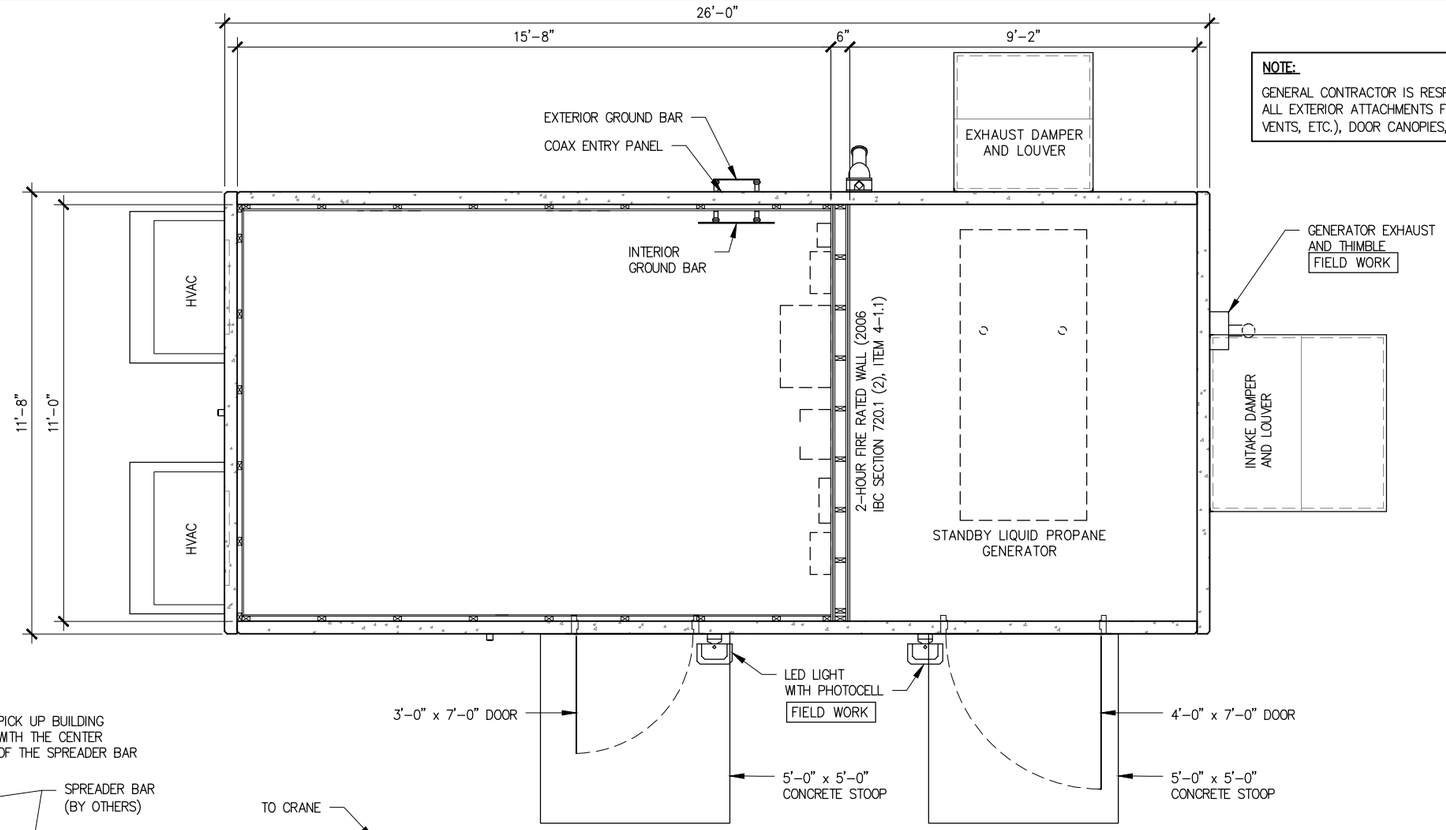

NOTE:

GENERAL CONTRACTOR IS RESPONSIBLE FOR INSTALLING ALL EXTERIOR ATTACHMENTS FOR GENERATOR (MUFFLER, VENTS, ETC.), DOOR CANOPIES, AND SECURITY LIGHTS.

1 Equipment Shelter Plan

SCALE: 1/4" = 1'-0"

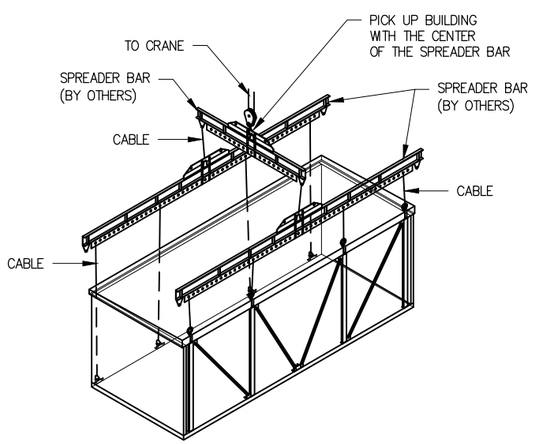

ALL BUILDINGS MUST BE LIFTED FROM ALL LIFTING POINTS (DOUBLE WIDE)

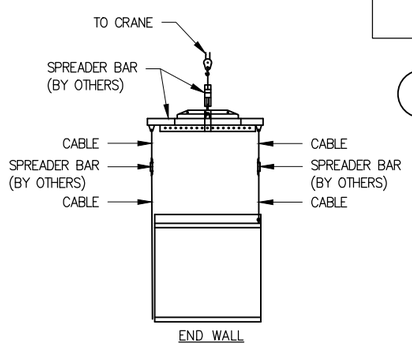

ALL BUILDINGS MUST BE LIFTED FROM ALL LIFTING POINTS

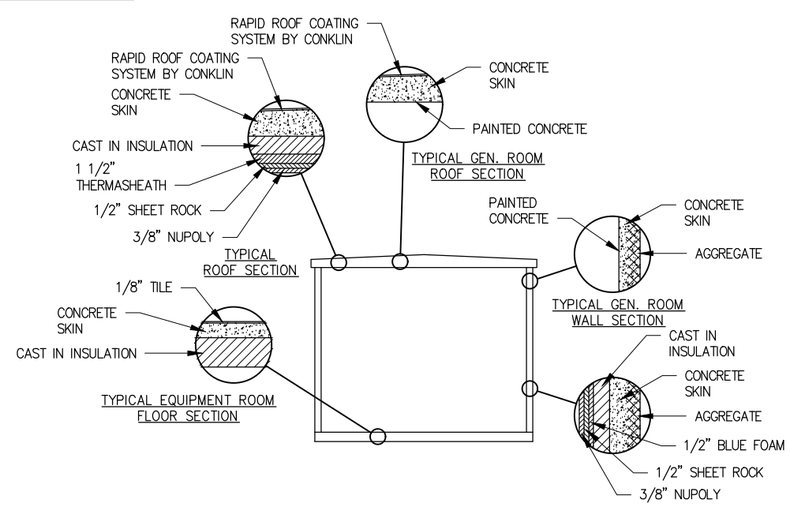

Traverse Section

Equipment Shelter Set Up Procedure

1. INSPECT BUILDING UPON DELIVERY FOR DAMAGE DURING TRANSPORTATION.
2. REMOVE LIFTING BRACKETS FROM SHELTER.
3. ATTACH TIE DOWN BRACKETS TO SHELTER AND FOUNDATION USING ANCHOR BOLTS.
4. INSTALL AND CAULK ALL ACCESSORIES (EXTERIOR LIGHTS, CANOPIES, GENERATOR EXHAUST AND VENT PIPES ETC.)
5. INSPECT ROOF AND ROOF EDGES FOR DAMAGE CAUSED BY OFFLOAD AND REPAIR IF NEEDED.
6. INSTALL BACKER ROD AND CAULK EXTERIOR WALLS AND ROOF.
7. INSTALL FLASHING ON ALL INTERIOR MOD. LINES.
8. MAKE ALL CONDUIT AND CABLE TRAY CROSSOVERS.
9. CLEAN INTERIOR AND COMPLETE ANY TOUCH UP PAINTING AS NEEDED.
10. CHECK DOOR ALARM FOR PROPER OPERATION.
11. CHECK LIGHTING AND AIR CONDITIONING FOR PROPER OPERATION.
12. INSPECT COMPLETE BUILDING COSMETICS.

Offload Notes

1. BUILDING SHALL BE OFFLOADED LEVEL.
2. ALL CABLES, SHACKLING, SPREADER BARS, ETC. SHALL BE DESIGNED AND SUPPLIED BY OTHERS.
3. ALL LIFTING POINTS SHALL BE USED.
4. 1 1/8" MAXIMUM DIAMETER FOR SHACKLES.
5. REMOVE BRACKET AFTER PLACEMENT OF SHELTER AND INSTALL ANCHOR TIE-DOWN PLATES (SHIPPED LOOSE INSIDE SHELTER) AT EACH LOCATION.
6. OFFLOAD BUILDING WITH CABLES IN VERTICAL POSITION. ANGLED POSITION CABLES ARE NOT ACCEPTABLE.

FOR REFERENCE ONLY

NO.	DATE	REVISIONS	BY	CHK	APP'D
B	12-10-18	PRELIMINARY CDs	AML	MJA	
A	11-02-18	LEASE EXHIBIT	MLM	MJA	

MISSION 1 COMMUNICATIONS
6202 Constitution Drive, Suite C
Fort Wayne, IN 46804

PYRAMID Network Services, LLC

MOTOROLA SOLUTIONS

EQUIPMENT SHELTER PLAN

MOORE PARK
E MOORE PARK TRAIL
BAILEY, MI 49303

C-9

THIS DRAWING IS COPYRIGHTED AND IS THE SOLE PROPERTY OF THE OWNER. IT IS PRODUCED SOLELY FOR USE BY THE OWNER AND ITS AFFILIATES. REPRODUCTION OR USE OF THIS DRAWING AND/OR THE INFORMATION CONTAINED IN IT IS FORBIDDEN WITHOUT THE WRITTEN PERMISSION OF THE OWNER.

ITS IS A VIOLATION OF LAW FOR ANY PERSON, UNLESS THEY ARE ACTING UNDER THE DIRECTION OF A LICENSED PROFESSIONAL ENGINEER, TO ALTER THIS DOCUMENT.

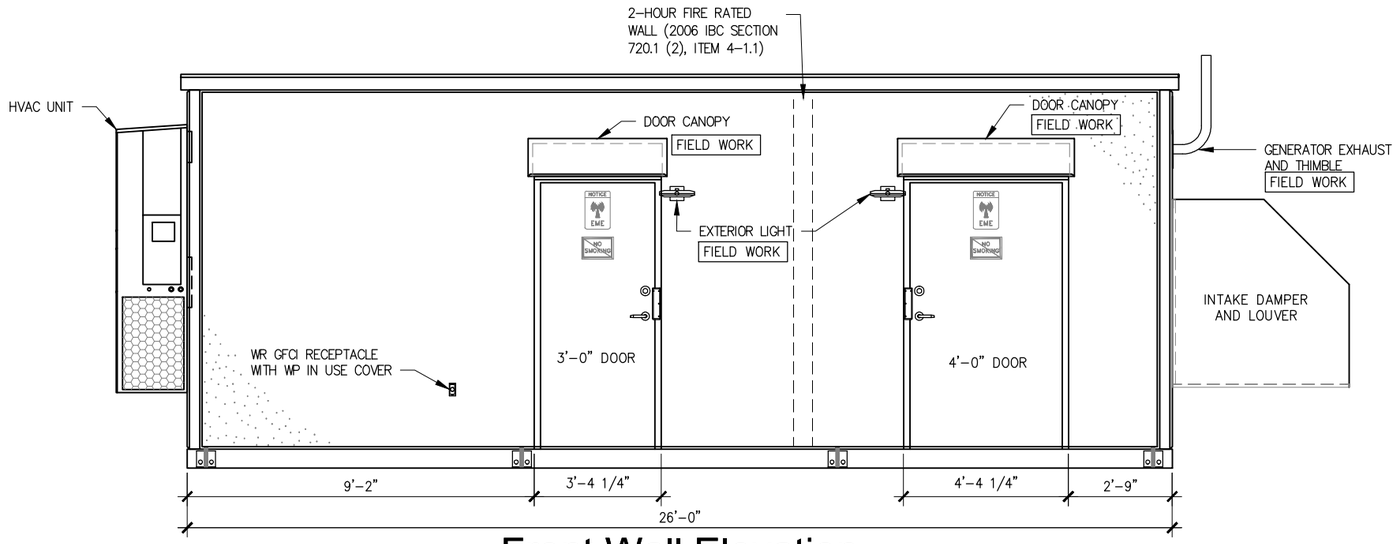

1 Front Wall Elevation

SCALE: 1/4" = 1'-0"

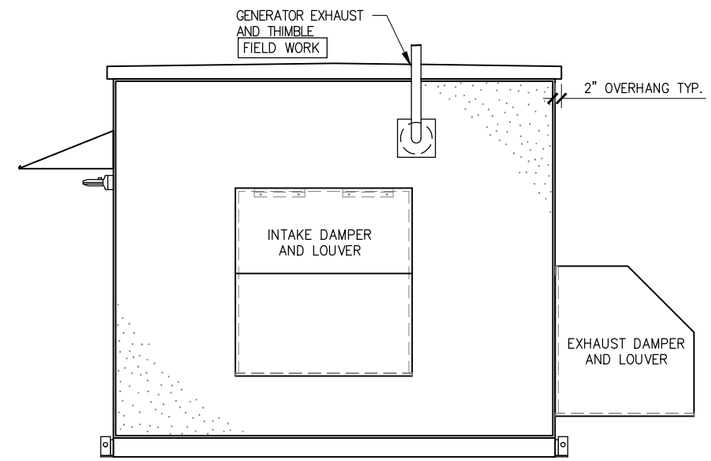

2 End Wall Elevation

SCALE: 1/4" = 1'-0"

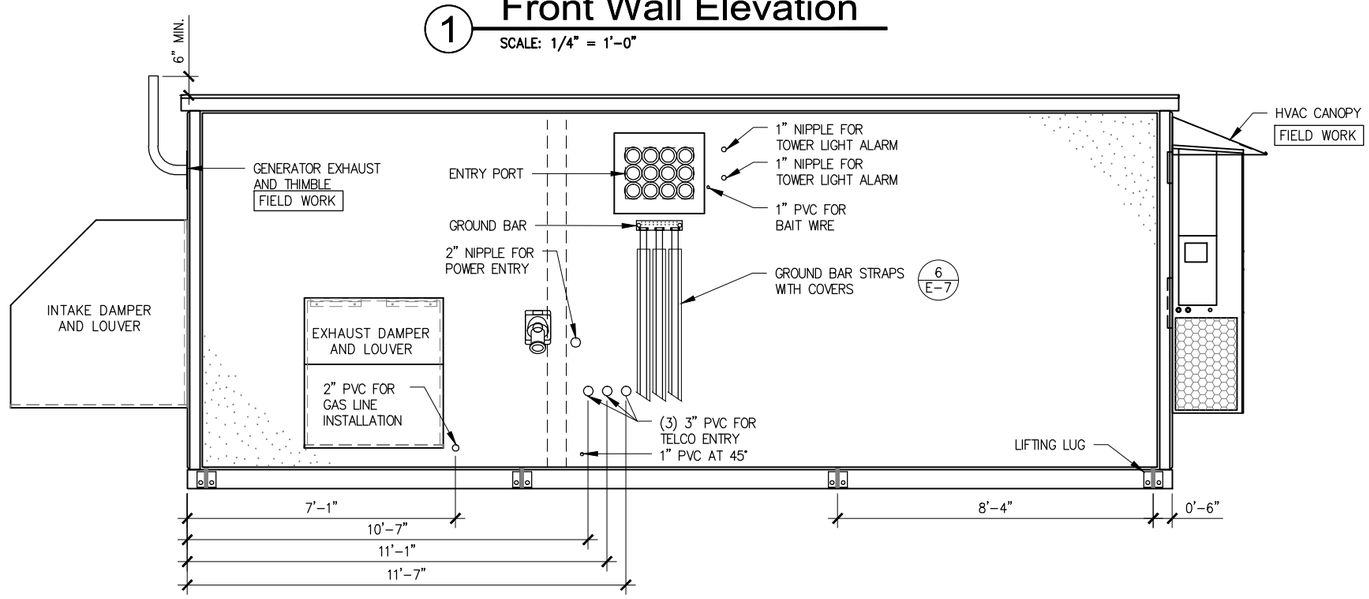

3 Rear Wall Elevation

SCALE: 1/4" = 1'-0"

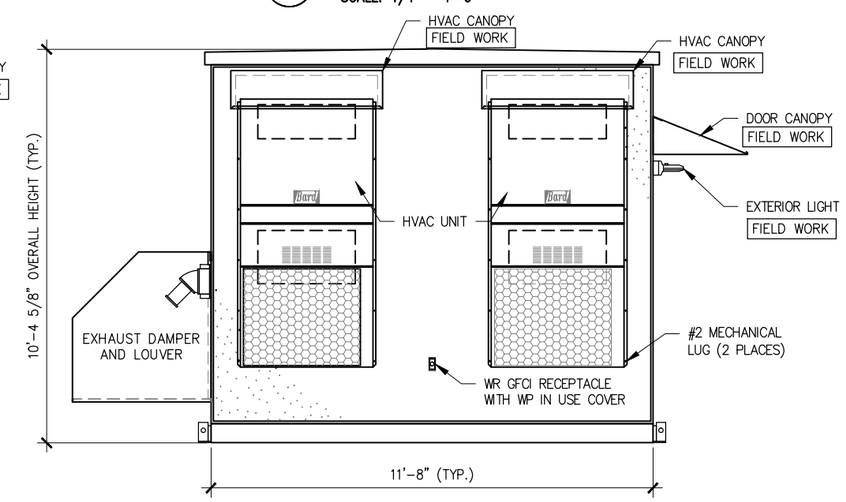

4 End Wall Elevation

SCALE: 1/4" = 1'-0"

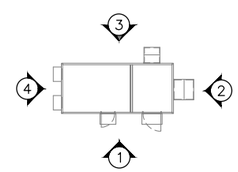

ELEVATION LEGEND

NOTES:

INFORMATION CONTAINED IN THESE DRAWINGS REFERRING TO THE EQUIPMENT SHELTER WERE OBTAINED FROM STANDARD EQUIPMENT SHELTER DRAWINGS PROVIDED BY MOTOROLA & PRODUCED BY THE SHELTER MANUFACTURER. THE INFORMATION CONTAINED IN THESE PLANS SHOULD BE CONSIDERED AS A GUIDE & THE CONTRACTOR IS SPECIFICALLY DIRECTED TO OBTAIN & USE THE SPECIFIED SHELTER MANUFACTURER'S PLANS PROVIDED BY MOTOROLA SPECIFIC TO THIS SITE.

FOR REFERENCE ONLY

NO.	DATE	REVISIONS	BY	CHK	APP'D
B	12-10-18	PRELIMINARY CDs	AML	MJA	
A	11-02-18	LEASE EXHIBIT	MLM	MJA	

MISSION 1 COMMUNICATIONS
6202 Constitution Drive, Suite C
Fort Wayne, IN 46804

PYRAMID Network Services, LLC

MOTOROLA SOLUTIONS

EQUIPMENT SHELTER ELEVATIONS

MOORE PARK
E MOORE PARK TRAIL
BAILEY, MI 49303

C-10

THIS DRAWING IS COPYRIGHTED AND IS THE SOLE PROPERTY OF THE OWNER. IT IS PRODUCED SOLELY FOR USE BY THE OWNER AND ITS AFFILIATES. REPRODUCTION OR USE OF THIS DRAWING AND/OR THE INFORMATION CONTAINED IN IT IS FORBIDDEN WITHOUT THE WRITTEN PERMISSION OF THE OWNER.

ITS IS A VIOLATION OF LAW FOR ANY PERSON, UNLESS THEY ARE ACTING UNDER THE DIRECTION OF A LICENSED PROFESSIONAL ENGINEER, TO ALTER THIS DOCUMENT.

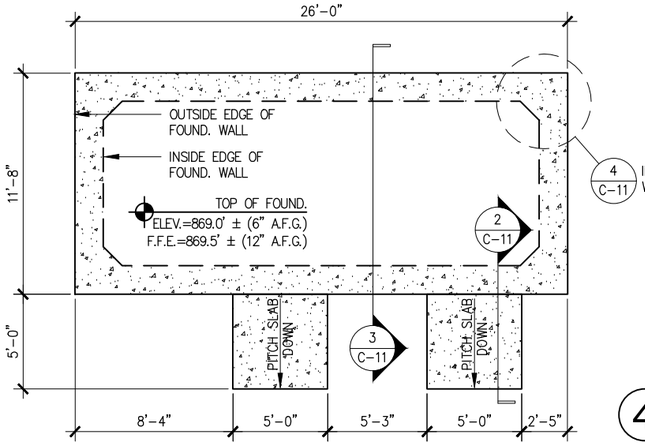

1 Shelter Foundation

SCALE: 1/8" = 1'-0"

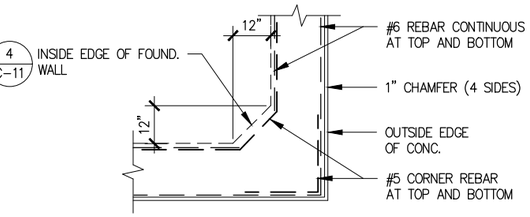

4 Corner Reinforcing

SCALE: 1/4" = 1'-0"

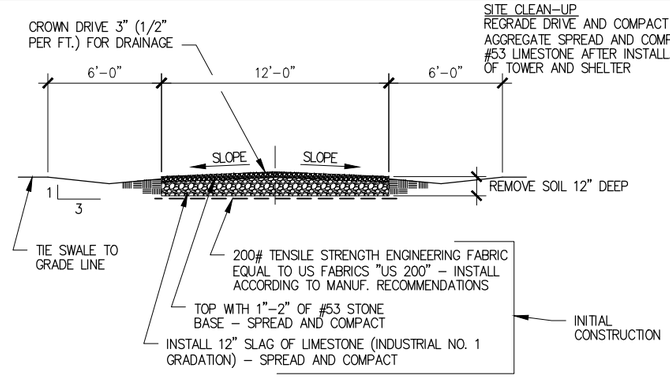

6 Access Drive Section

SCALE: 1/8" = 1'-0"

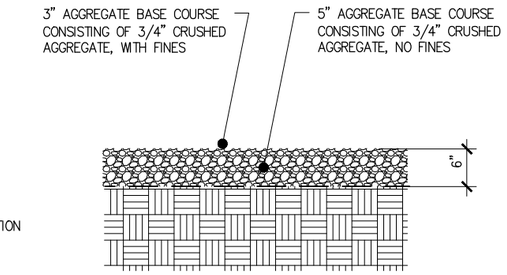

NOTE:
IT IS THE RESPONSIBILITY OF THE G.C. TO VERIFY THE LIMESTONE IS UNIFORMLY WHITE IN COLOR AFTER PLACEMENT

7 Aggregate Base

SCALE: 1/2" = 1'-0"

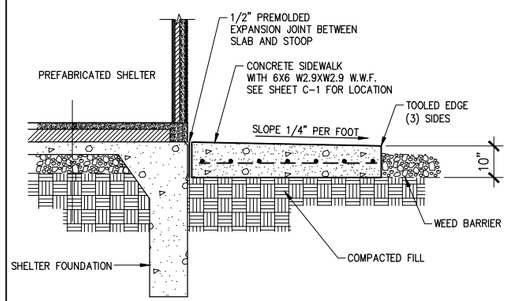

2 Concrete Stoop

SCALE: 1/4" = 1'-0"

NOTES:

WHERE PERMISSIBLE BY THE LOCAL CODES, AS EPA APPROVED HERBICIDE SHALL BE APPLIED TO ALL AREAS PRIOR TO LAYING DOWN THE GEOTEXTILE FABRIC. THE RATE OF APPLICATION OF THIS HERBICIDE SHALL BE A MIN. OF 10 POUNDS OF PRODUCT PER ACRE, UNLESS OTHERWISE REQUIRED BY LOCAL CODES OR MANUFACTURER'S RECOMMENDATIONS. THE CONTRACTOR SHALL CHECK THE LOCAL CODES PRIOR TO APPLYING DEFOLIANT. SUBSTANCE SHALL NOT BE APPLIED IF GROUND IS FROZEN OR THERE IS DANGER OR WEED KILLER BEING WASHED BEYOND THE INTENDED AREA.

CONTRACTOR SHALL REMOVE ANY TOP SOIL AND ANY DELETERIOUS/UNSUITABLE SOILS AND REPLACE WITH ENGINEERED FILL. FILL SHOULD BE PLACED IN MAX. 8" LIFTS IN LOOSE THICKNESS, MOISTURE CONDITIONED TO WITHIN 2% OF THE OPTIMUM MOISTURE CONTENT TO A 95% DENSITY PER ASTM D1557 MODIFIED PROCTOR METHOD

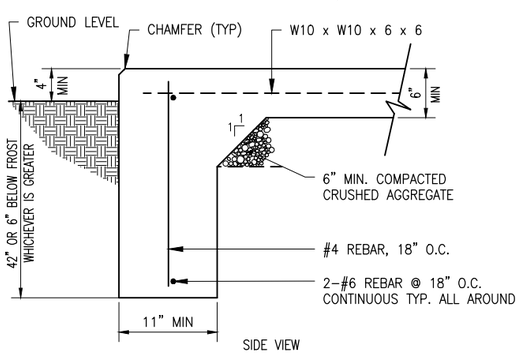

3 Foundation Section

SCALE: 1/4" = 1'-0"

NOTES:

FOUNDATIONS AS DESIGNED ASSUME NORMAL SOILS – GEOTECHNICAL BORING RESULTS NOT PROVIDED AT TIME OF DESIGN, RESULTS OF THIS REPORT COULD ALTER THE FOUNDATION DESIGN – COORDINATE W/SOILS ENGINEER

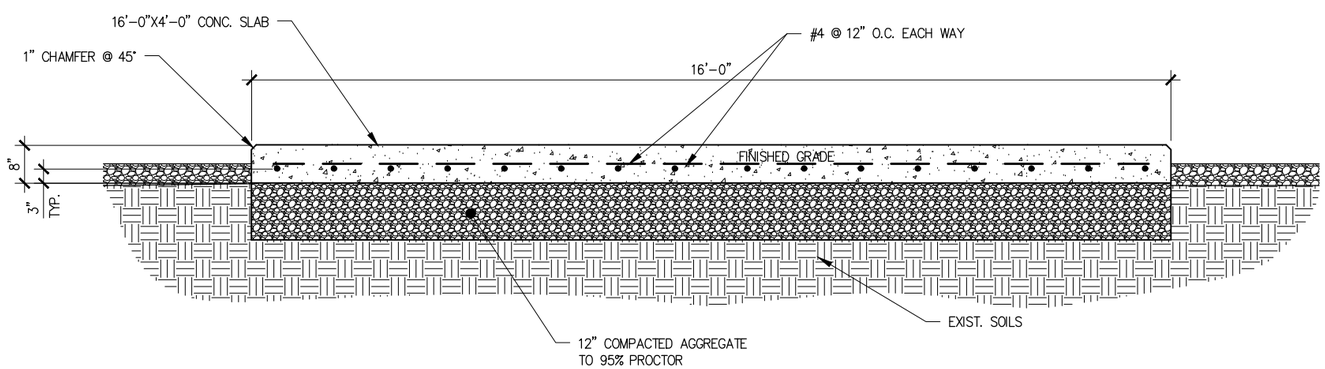

5 LP Slab Detail

SCALE: 3/8" = 1'-0"

PRELIMINARY NOT FOR CONSTRUCTION

NO.	DATE	REVISIONS	BY	CHK	APP'D
B	12-10-18	PRELIMINARY CDs	AML	MJA	
A	11-02-18	LEASE EXHIBIT	MLM	MJA	

MISSION 1 COMMUNICATIONS
6202 Constitution Drive, Suite C
Fort Wayne, IN 46804

PYRAMID Network Services, LLC

MOTOROLA SOLUTIONS

SITE CIVIL DETAILS

MOORE PARK
E MOORE PARK TRAIL
BAILEY, MI 49303

C-11

THIS DRAWING IS COPYRIGHTED AND IS THE SOLE PROPERTY OF THE OWNER. IT IS PRODUCED SOLELY FOR USE BY THE OWNER AND ITS AFFILIATES. REPRODUCTION OR USE OF THIS DRAWING AND/OR THE INFORMATION CONTAINED IN IT IS FORBIDDEN WITHOUT THE WRITTEN PERMISSION OF THE OWNER.

ITS IS A VIOLATION OF LAW FOR ANY PERSON, UNLESS THEY ARE ACTING UNDER THE DIRECTION OF A LICENSED PROFESSIONAL ENGINEER, TO ALTER THIS DOCUMENT.

GENERAL NOTES:

1. THE LOCATION, SIZE & TYPE OF MATERIAL OF EXISTING UTILITIES INDICATED ON THE PLANS IS NOT REPRESENTED AS BEING ACCURATE. SUFFICIENT OR COMPLETE. IT SHALL BE THE CONTRACTOR'S RESPONSIBILITY TO DETERMINE THE ACTUAL LOCATION OF ALL SUCH FACILITIES, INCLUDING THE SERVICE CONNECTIONS TO UNDERGROUND UTILITIES. PRIOR TO CONSTRUCTION THE CONTRACTOR SHALL NOTIFY THE UTILITY COMPANIES OF HIS OPERATIONAL PLANS & SHALL OBTAIN FROM THE RESPECTIVE UTILITY COMPANIES DETAILED INFORMATION & ASSISTANCE RELATIVE TO THE LOCATION OF THEIR FACILITIES & THE WORKING SCHEDULE OF THE COMPANIES FOR REMOVAL OR ADJUSTMENT WHERE REQUIRED. IN THE EVENT AN UNEXPECTED UTILITY INTERFERENCE IS ENCOUNTERED DURING CONSTRUCTION, THE CONTRACTOR SHALL IMMEDIATELY NOTIFY THE UTILITY COMPANY OF JURISDICTION. THE ENGINEER SHALL ALSO BE IMMEDIATELY NOTIFIED. ANY SUCH MAINS & SERVICES SHALL BE RESORTED TO SERVICE AT ONCE & PAID FOR BY THE CONTRACTOR AT NO ADDITIONAL COST TO THE CONTRACT.

2. NEW GROUNDING NOT SHOWN FOR CLARITY

3. WARNING TAPE SHALL BE INSTALLED DIRECTLY ABOVE CONDUITS AT A DEPTH OF 12 INCHES BELOW FINISHED GRADE UNLESS NOTED OTHERWISE. TAPE COLOR SHALL BE AS SPECIFIED BELOW AND SHALL BEAR DESCRIPTION OF THE UTILITY.

G.C. RESPONSIBLE FOR PRE-CONSTRUCTION WALK WITH UTILITY PROVIDERS TO VERIFY REQUIREMENTS

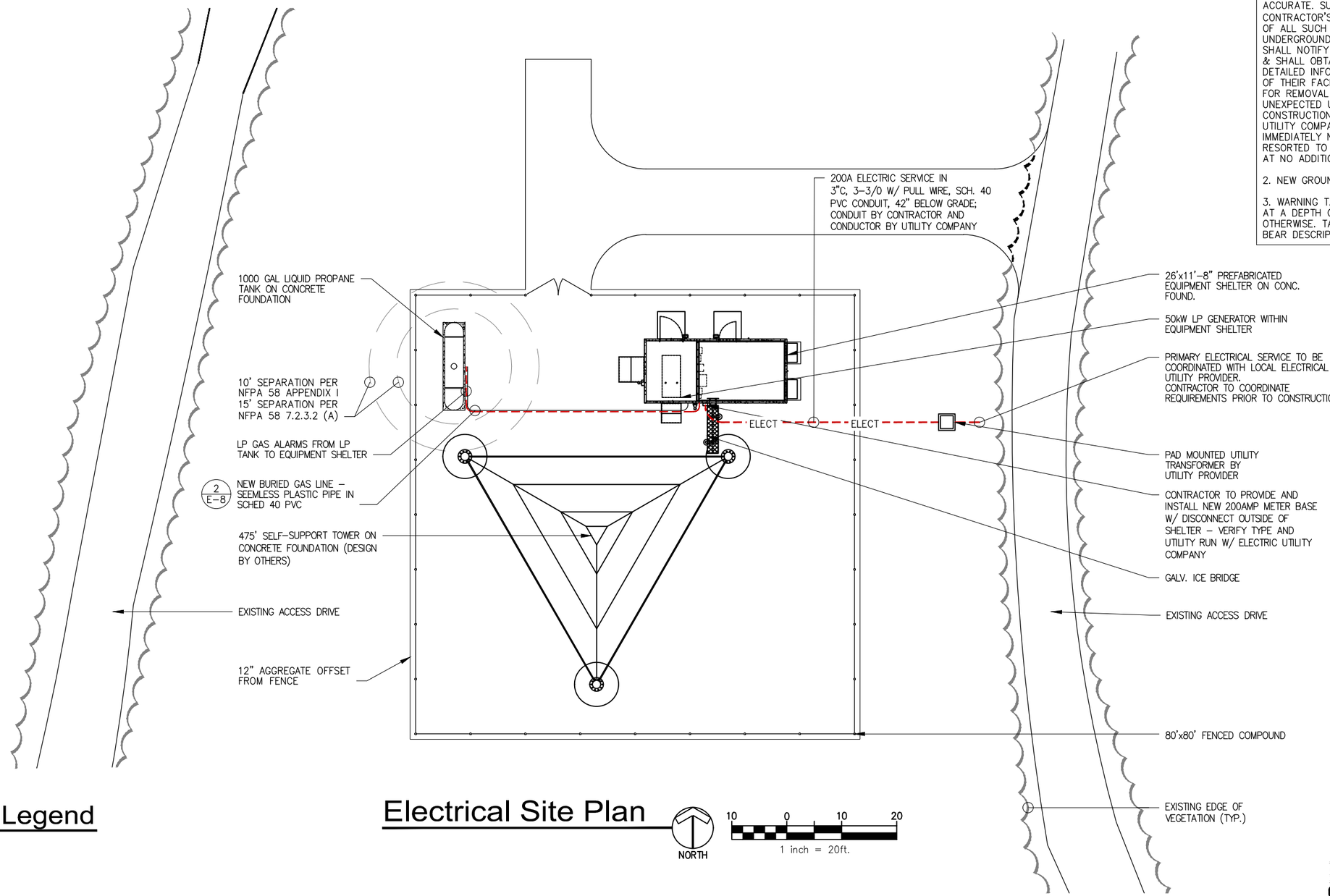

Electrical Site Plan

NORTH

10 0 10 20

1 inch = 20ft.

Utility Color Legend

- ELECTRIC
- GAS, OIL, STEAM
- COMMUNICATIONS
- POTABLE WATER
- RECLAIMED WATER
- SEWER/ DRAINAGE
- SURVEY MARKS

811 Know what's below. Call before you dig.

1-800-482-7171 CALL TOLL FREE

PRELIMINARY NOT FOR CONSTRUCTION

NO.	DATE	REVISIONS	BY	CHK	APP'D
B	12-10-18	PRELIMINARY CDs	AML	MJA	
A	11-02-18	LEASE EXHIBIT	MLM	MJA	

MISSION 1 COMMUNICATIONS
6202 Constitution Drive, Suite C
Fort Wayne, IN 46804

PYRAMID Network Services, LLC

MOTOROLA SOLUTIONS

ELECTRICAL SITE PLAN

MOORE PARK
E MOORE PARK TRAIL
BAILEY, MI 49303

E-1

THIS DRAWING IS COPYRIGHTED AND IS THE SOLE PROPERTY OF THE OWNER. IT IS PRODUCED SOLELY FOR USE BY THE OWNER AND ITS AFFILIATES. REPRODUCTION OR USE OF THIS DRAWING AND/OR THE INFORMATION CONTAINED IN IT IS FORBIDDEN WITHOUT THE WRITTEN PERMISSION OF THE OWNER.

ITS IS A VIOLATION OF LAW FOR ANY PERSON, UNLESS THEY ARE ACTING UNDER THE DIRECTION OF A LICENSED PROFESSIONAL ENGINEER, TO ALTER THIS DOCUMENT.

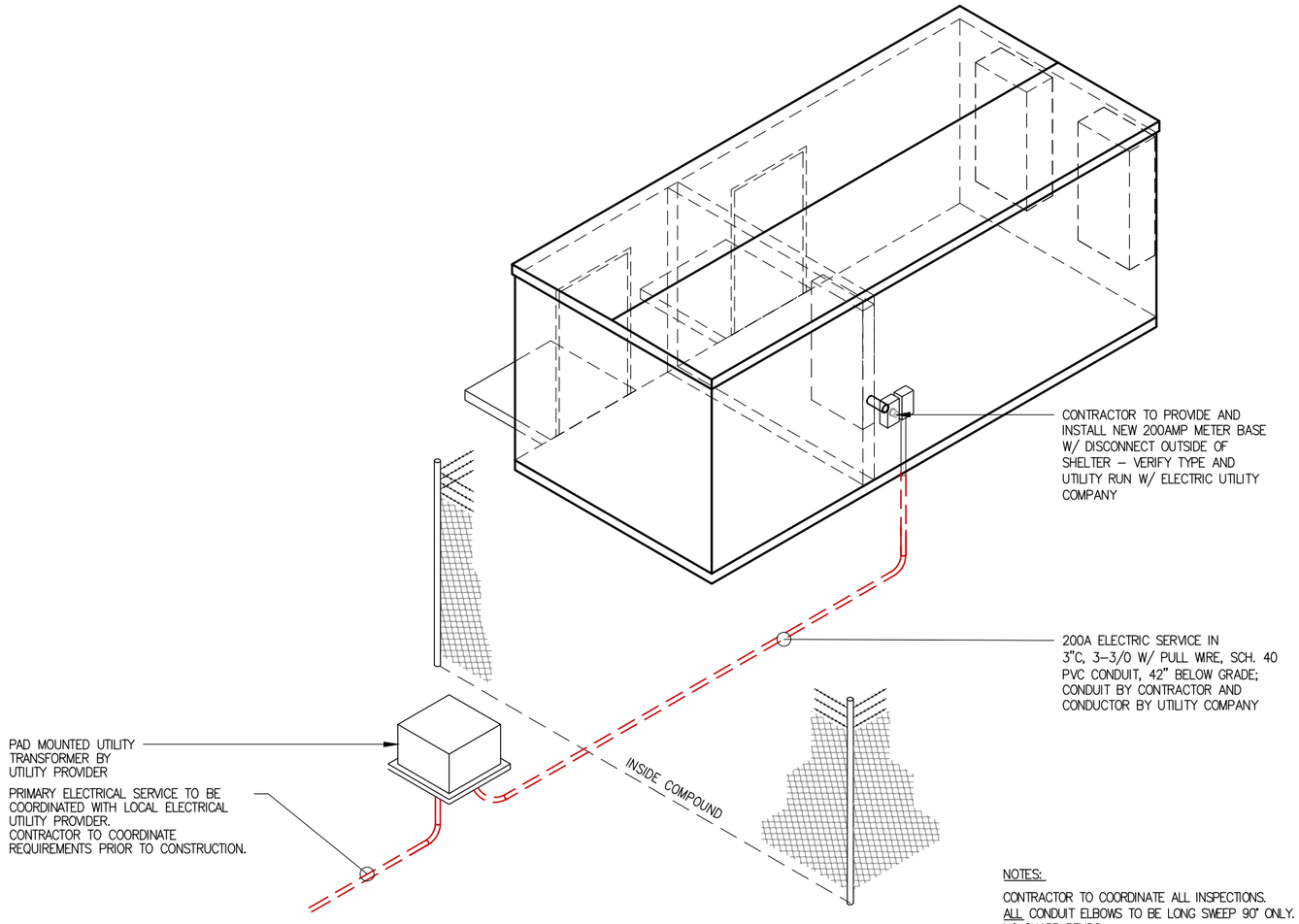

1 Utility Riser Diagram

NO SCALE

NOTES:

CONTRACTOR TO COORDINATE ALL INSPECTIONS.
ALL CONDUIT ELBOWS TO BE LONG SWEEP 90° ONLY.
NO SHARP BENDS.
CONTRACTOR SHALL SUPPLY DETECTABLE METALLIC FLAT "MULE" TAPE IN ALL UTILITY CONDUIT BETWEEN H–FRAME AND EQUIPMENT SHELTER

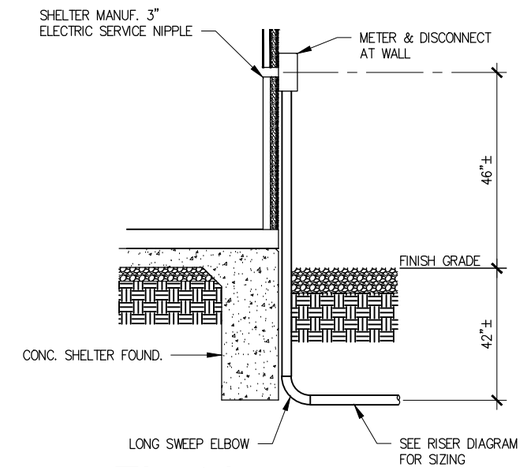

2 Electric Service Entrance

SCALE: 1/4" = 1'–0"

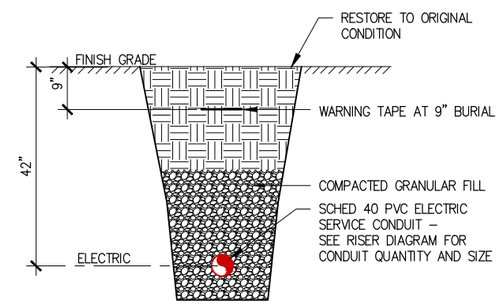

3 Buried Utility

SCALE: 3/8" = 1'–0"

Utility Color Legend

- ELECTRIC
- GAS, OIL, STEAM
- COMMUNICATIONS
- POTABLE WATER
- RECLAIMED WATER
- SEWER/ DRAINAGE
- SURVEY MARKS

PRELIMINARY NOT FOR CONSTRUCTION

NO.	DATE	REVISIONS	BY	CHK	APP'D
B	12–10–18	PRELIMINARY CDs	AML	MJA	
A	11–02–18	LEASE EXHIBIT	MLM	MJA	

MISSION 1 COMMUNICATIONS
6202 Constitution Drive, Suite C
Fort Wayne, IN 46804

PYRAMID Network Services, LLC

MOTOROLA SOLUTIONS

EXTERIOR ELECTRICAL DETAILS

MOORE PARK
E MOORE PARK TRAIL
BAILEY, MI 49303

E-2

THIS DRAWING IS COPYRIGHTED AND IS THE SOLE PROPERTY OF THE OWNER. IT IS PRODUCED SOLELY FOR USE BY THE OWNER AND ITS AFFILIATES. REPRODUCTION OR USE OF THIS DRAWING AND/OR THE INFORMATION CONTAINED IN IT IS FORBIDDEN WITHOUT THE WRITTEN PERMISSION OF THE OWNER.

ITS IS A VIOLATION OF LAW FOR ANY PERSON, UNLESS THEY ARE ACTING UNDER THE DIRECTION OF A LICENSED PROFESSIONAL ENGINEER, TO ALTER THIS DOCUMENT.

PP1 200A, 120/240VAC, 1ϕ/3W, 60Hz, M.BKR

LOAD	VOLT AMPS A	VOLT AMPS B	WIRE	BREAKER P	BREAKER TRIP				BREAKER TRIP	BREAKER P	WIRE	VOLT AMPS A	VOLT AMPS B	LOAD
PP2 FEED	5620		1	2	125	1		2	30	1	10	250		TOWER LIGHT
		3620				3		4	30	1	10		250	TOWER LIGHT
HVAC #1	3300		6	2	50	5		6	50	2	6	3300		HVAC #2
		3300				7		8					3300	
FIRE ALARM PANEL	120		12	1	20	9		10	20	1	12	180		BAIT WIRE
SURGE ARRESTOR		60	4	2	60	11		12	20	1	12		720	GEN RM RECEPTS
	60					13		14	15	1	12	120		GEN RM SMOKES
LIGHTS INT & EXT		870	12	1	20	15		16	15	1				SPARE
DEHYDRATOR	180		12	1	20	17		18	20	1	12	900		RECEPTACLES
SPARE				1	15	19		20	20	1	12		360	RECEPTACLE GFCI
BLANK						21		22	20	1	12	120		BLOCK HEATER ***
BLANK						23		24					120	BATTERY CHARGER ***
BLANK						25		26						BLANK
BLANK						27		28						BLANK
BLANK						29		30						BLANK
BLANK						31		32						BLANK
BLANK						33		34						BLANK
BLANK						35		36						BLANK
BLANK						37		38						BLANK
BLANK						39		40						BLANK
VA PER PHASE	9280	7850										4870	4750	VA PER PHASE
												14150	12600	TOTAL VA PER PHASE
												118	105	AMPS PER PHASE
													26.8	TOTAL KVA
													161	AMPS X 110%

* CALCULATED AT 125% FOR CONTINUOUS LOAD
** CONNECTION BY OTHERS
*** GROUND FAULT PROTECTION BY OTHERS AS REQUIRED

PP2 200A, 120/240VAC, 1ϕ/3W, 60Hz, M.BKR

LOAD	VOLT AMPS A	VOLT AMPS B	WIRE	BREAKER P	BREAKER TRIP				BREAKER TRIP	BREAKER P	WIRE	VOLT AMPS A	VOLT AMPS B	LOAD
DC RECTIFIER #1	1000		10	2	30	1		2	20	1	12	180		ROW 2 CTK 9
		1000				3		4	20	1	12		180	ROW 2 CTK 11
DC RECTIFIER #2	1000		10	2	30	5		6	15	1				SPARE
		1000				7		8	15	1				SPARE
DC RECTIFIER #3	1000		10	2	30	9		10	15	1				SPARE
		1000				11		12	15	1				SPARE
ROW 2 CTK 13	180		12	1	20	13		14	15	1				SPARE
ROW 2 CTK 15		180	12	1	20	15		16	15	1				SPARE
ROW 2 CTK 17	180		12	1	20	17		18	15	1				SPARE
ROW 2 CTK 19		180	12	1	20	19		20	15	1				SPARE
BLANK						21		22						BLANK
BLANK						23		24						BLANK
BLANK						25		26						BLANK
BLANK						27		28						BLANK
BLANK						29		30						BLANK
BLANK						31		32						BLANK
BLANK						33		34						BLANK
BLANK						35		36	60	1	1		5760	PP3 FEED
TECLO RECEPT #1	180		12	1	20	37		38	20	1	12	180		TECLO RECEPT #2
TECLO RECEPT #3		180	12	1	20	39		40	20	1	12		180	TECLO RECEPT #4
VA PER PHASE	3540	3540										360	6120	VA PER PHASE
												3900	9660	TOTAL VA PER PHASE
												32.5	80.5	AMPS PER PHASE
													13.56	TOTAL KVA
													88.55	AMPS X 110%

* CALCULATED AT 125% FOR CONTINUOUS LOAD
** CONNECTION BY OTHERS
*** GROUND FAULT PROTECTION BY OTHERS AS REQUIRED

PP3 100A, 120/240VAC, 1ϕ/3W, 60Hz, M.BKR

LOAD	VOLT AMPS A	VOLT AMPS B	WIRE	BREAKER P	BREAKER TRIP				BREAKER TRIP	BREAKER P	WIRE	VOLT AMPS A	VOLT AMPS B	LOAD
PDU #1		30	1	2	30	1		2	30	2	1	30		PDU #2
	30					3		4					30	
PDU #3		30	1	2	30	5		6						BLANK
	30					7		8						BLANK
BLANK						9		10						BLANK
BLANK						11		12						BLANK
VA PER PHASE												TBD	TBD	VA PER PHASE
												TBD	TBD	TOTAL VA PER PHASE
												TBD	TBD	AMPS PER PHASE
													TBD	TOTAL KVA
													TBD	AMPS X 110%

* CALCULATED AT 125% FOR CONTINUOUS LOAD
** CONNECTION BY OTHERS
*** GROUND FAULT PROTECTION BY OTHERS AS REQUIRED

1 Panel Schedule

NO SCALE

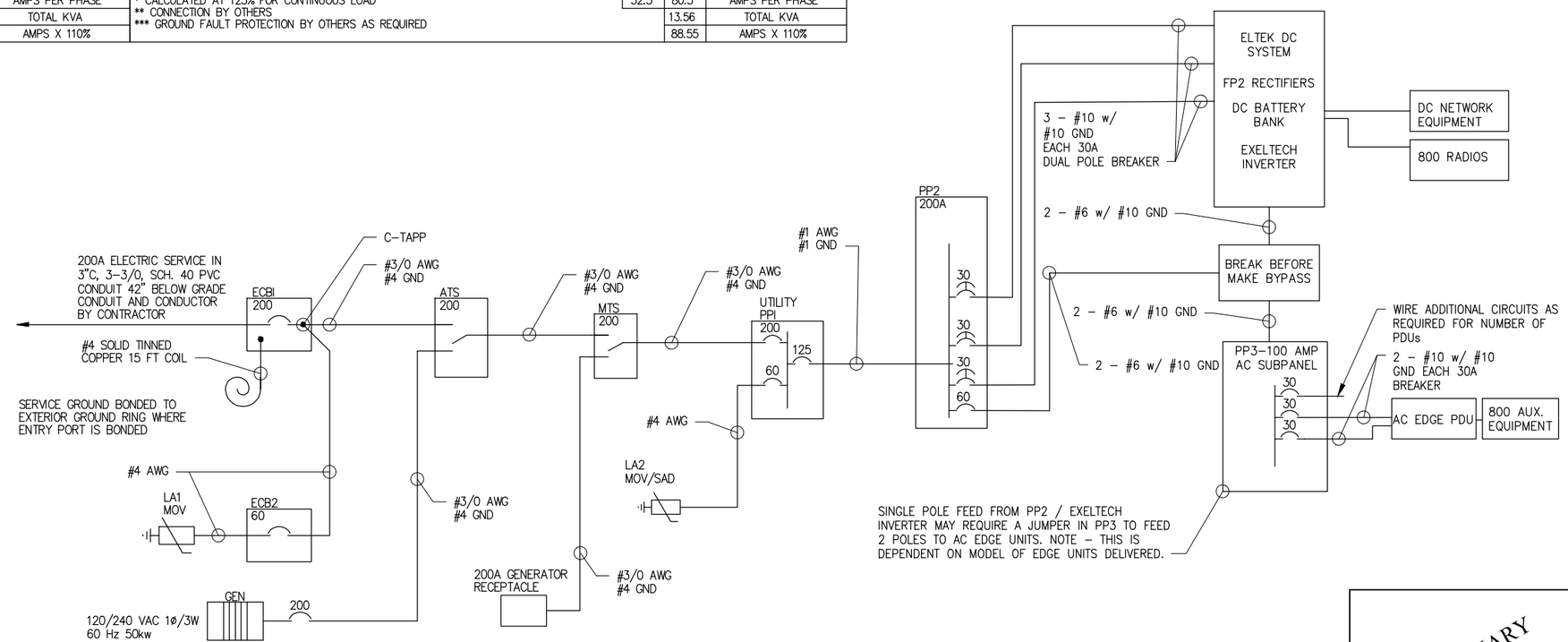

2 Shelter One-Line Diagram

NO SCALE

GENERAL NOTES:

1. ALL ELECTRICAL EQUIPT.1ENT SHALL BE INSTALLED IN CONFORMANCE WITH NFPA 70, THE RESPECTIVE EQUIPMENT MANUFACTURER'S DIRECTIONS AND ALL OTHER APPLICABLE LOCAL CODES, LAWS, ORDINANCES AND REQUIREMENTS IN FORCE. ANY INSTALLATION WHICH VOID THE U.L LISTING (OR OTHER THIRD PARTY LISTING) AND/OR THE MANUFACTURER'S WARRANTY OF A DEVICE SHALL NOT BE PERMITTED.
2. COORDINATE ELECTRIC SERVICE WITH LOCAL POWER UTILITY COMPANY. COORDINATE WITH UTILITY FOR METER TYPE AND CONNECTION.
3. ALL CONDUIT SHALL BE SEALED WATERTIGHT UNTIL FINAL TERMINATION'S ARE MADE.
4. PROVIDE PULL CORD IN AU. CONDUITS. SECURE AT EACH END.
5. ADJUST DEPTH OF CONDUITS TO PASS ABOVE GROUNDING SYSTEM.
6. PROVIDE 18 INCH (MIN.) RADIUS EL.BOWS FOR ALL. BENDS.
7. PROVIDE PHENOLIC ENGRAVED NAMEPLATES AT THE SERVICE DISCONNECT NEUTRAL SHALL BE PULLED WHEN REQUIRED BY UPS MANUFACTURER LABELED; "SERVICE DISCONNECT" (PER NEC 230–70). PROVIDE ADDITIONAL NAMEPLATES NOTING TYPE AND LOCATION OF STANDBY POWER SOURCE.

SERVICE CONDUIT:

1. PROVIDE PVC SCH 40 (OUTSIDE), PVC SCH 80 (OUTSIDE IN TRAFFIC AREAS) CONDUIT FOR ALL POWER & ALARM/CONTROL REQUIREMENTS – WIRING PROVIDED BY CONTRACTOR.
2. COORDINATE LOCATION OF GENERATOR POWER AND CONTROL WITH GENERATOR EQUIPMENT INSTALLATION & SHELTER MANUFACTURER DRAWINGS.
3. MOSCAD CONTROL PANEL FURNISHED BY SHELTER MANUFACTURER &: INSTALLED BY CONTRACTOR UNDER THIS CONTRACT .GENERATOR REMOTE RELAY PANEL PROVIDED & INSTALLED BY SHELTER MANUFACTURER.

PRELIMINARY NOT FOR CONSTRUCTION

NO.	DATE	REVISIONS	BY	CHK	APP'D
B	12-10-18	PRELIMINARY CDs	AML	MJA	
A	11-02-18	LEASE EXHIBIT	MLM	MJA	

MISSION 1 COMMUNICATIONS
6202 Constitution Drive, Suite C
Fort Wayne, IN 46804

PYRAMID Network Services, LLC

MOTOROLA SOLUTIONS

PANEL SCHEDULES / ONE LINE DIAGRAM

MOORE PARK
E MOORE PARK TRAIL
BAILEY, MI 49303

E-3

THIS DRAWING IS COPYRIGHTED AND IS THE SOLE PROPERTY OF THE OWNER. IT IS PRODUCED SOLELY FOR USE BY THE OWNER AND ITS AFFILIATES. REPRODUCTION OR USE OF THIS DRAWING AND/OR THE INFORMATION CONTAINED IN IT IS FORBIDDEN WITHOUT THE WRITTEN PERMISSION OF THE OWNER.

ITS IS A VIOLATION OF LAW FOR ANY PERSON, UNLESS THEY ARE ACTING UNDER THE DIRECTION OF A LICENSED PROFESSIONAL ENGINEER, TO ALTER THIS DOCUMENT.

TYPICAL GROUNDING NOTES

1. ALL METALLIC ITEMS AND FENCE POSTS WITHIN 6' OF THE GROUNDING SYSTEM TO BE BONDED TO GROUND RING.
2. FENCE FABRIC TO BE BONDED PER MOTOROLA R-56 STANDARDS REV B.
3. FENCE FABRIC RUNS LESS THAN 40' SHALL BE BONDED ON ONE END. FENCE FABRIC RUNS GREATER THAN 40' SHALL BE BONDED ON BOTH ENDS.
4. FENCE TOP RAIL TO BE BONDED TO CORNER POSTS ON BOTH ENDS.

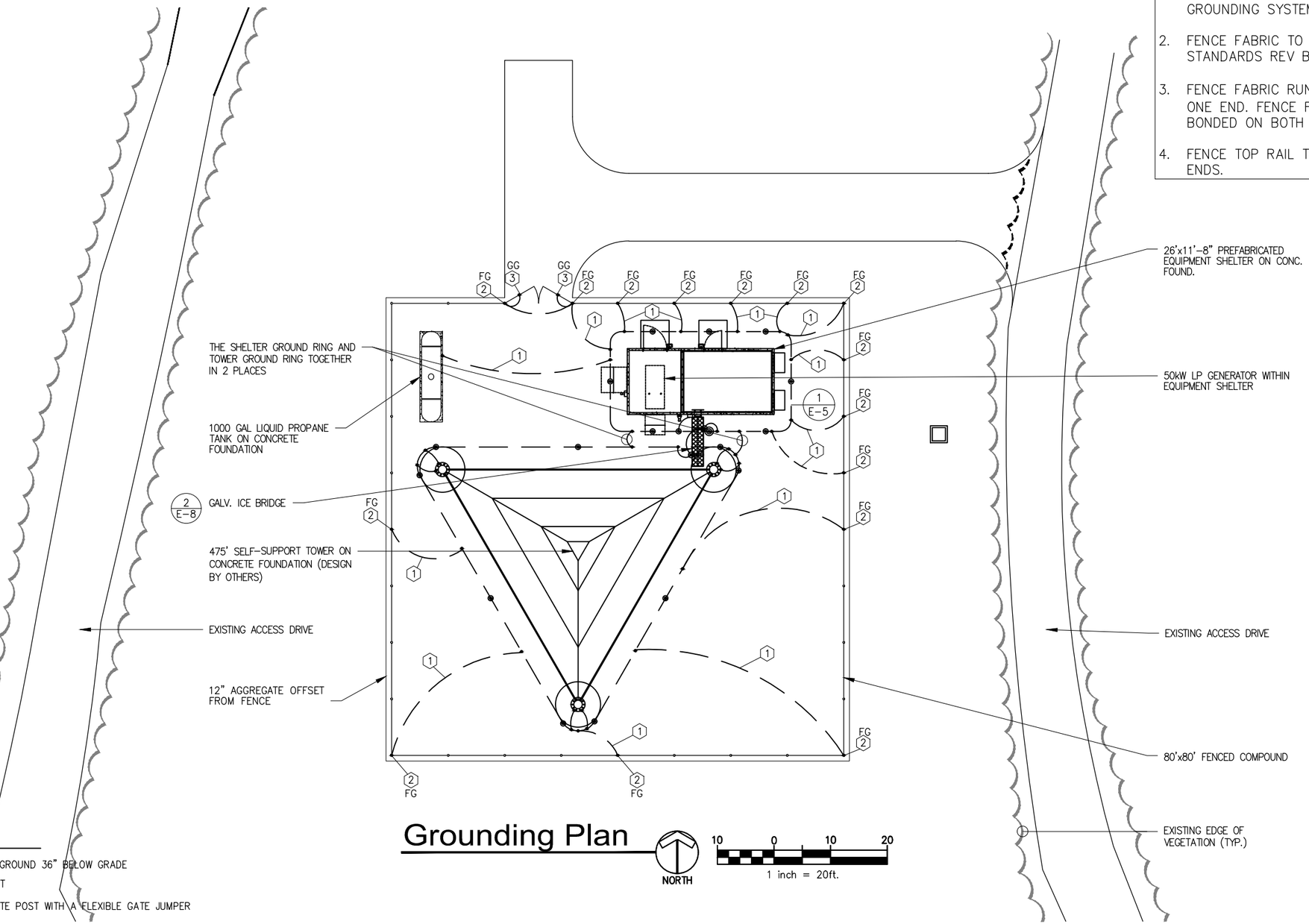

Grounding Plan

Legend

- (1) #2 SOLID BARE COPPER GROUND 36" BELOW GRADE
- (2) CADWELD TO FENCE POST
- (3) BOND GATE LEAF TO GATE POST WITH A FLEXIBLE GATE JUMPER
- GROUND ROD
- GROUND SYSTEM TEST WELL (HAND HOLE)
- CADWELD CONNECTION
- FENCE LINE

811 Know what's below. Call before you dig.
1-800-482-7171 CALL TOLL FREE

PRELIMINARY NOT FOR CONSTRUCTION

NO.	DATE	REVISIONS	BY	CHK	APP'D
B	12-10-18	PRELIMINARY CDs	AML	MJA	
A	11-02-18	LEASE EXHIBIT	MLM	MJA	

MISSION 1 COMMUNICATIONS
6202 Constitution Drive, Suite C
Fort Wayne, IN 46804

PYRAMID Network Services, LLC

MOTOROLA SOLUTIONS

GROUNDING PLAN

MOORE PARK
E MOORE PARK TRAIL
BAILEY, MI 49303

E-4

THIS DRAWING IS COPYRIGHTED AND IS THE SOLE PROPERTY OF THE OWNER. IT IS PRODUCED SOLELY FOR USE BY THE OWNER AND ITS AFFILIATES. REPRODUCTION OR USE OF THIS DRAWING AND/OR THE INFORMATION CONTAINED IN IT IS FORBIDDEN WITHOUT THE WRITTEN PERMISSION OF THE OWNER.

ITS IS A VIOLATION OF LAW FOR ANY PERSON, UNLESS THEY ARE ACTING UNDER THE DIRECTION OF A LICENSED PROFESSIONAL ENGINEER, TO ALTER THIS DOCUMENT.

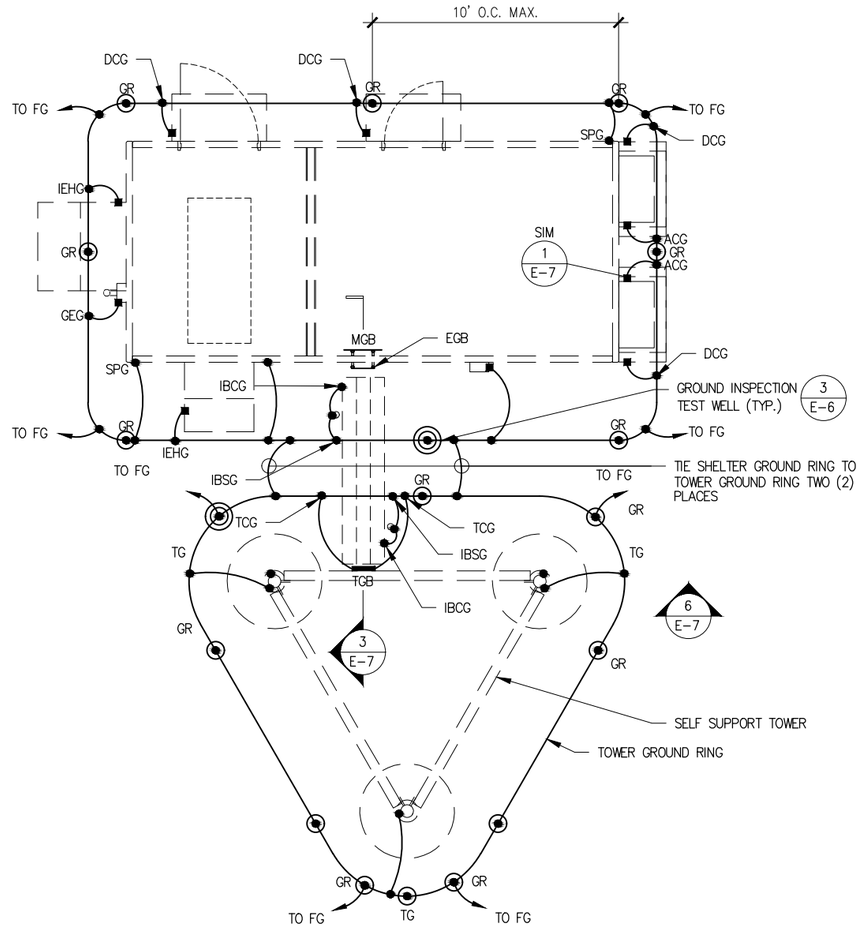

Shelter and Tower Grounding Schematic

1

SCALE: 1/8" = 1'-0"

Legend

FG FENCE GROUND: E.C. TO FURNISH AND INSTALL #2 AWG BARE SOLID TNND COPPER GROUND WIRE AT FENCE POST. GROUND WIRE TO BE ROUTED ALONG FENCE POST AND CADWELDED FOUR (4) PLACES, TOP RAIL, TOP AND BOTTOM OF CORNER POST, AND GROUND RING.

GG GATE GROUND: SIMILAR TO FENCE GROUND (FG), E.C. SHALL ALSO FURNISH AND INSTALL #2 BRAIDED GATE JUMPER WIRE BETWEEN THE GATE FRAME AND THE GATE POST. CONNECTIONS AT GATE FRAME AND GATE POST TO BE CADWELD.

TG TOWER GROUND: E.C. TO FURNISH AND INSTALL ONE (1) #2 AWG BARE SOLID TNND COPPER GROUND WIRES FROM BASE OF TOWER OR TOWER LEGS TO TOWER GROUND RING. ALL CONNECTIONS TO BE CADWELD.

TGB TOWER GROUND BAR: E.C. TO FURNISH AND INSTALL 20"x4"x1/4" TNND COPPER GROUND BARS ON THE TOWER AS REQUIRED. ONE TO BE LOCATED AT ANTENNA MOUNT ELEVATION (ATTACHED TO TOWER STEEL), THE OTHER AT THE BASE OF THE TOWER ADJACENT TO THE ICE BRIDGE (ISOLATED FROM TOWER STEEL).ADDITIONAL TRANSMISSION LINE GROUND KITS SHALL BE INSTALLED AS NEEDED TO LIMIT THE DISTANCE BETWEEN GROUND KITS TO 50 FEET MINIMUM AND 75 FEET MAXIMUM.

TCG TOWER COAX GROUND: E.C. TO FURNISH AND INSTALL TWO (2) #2 AWG BARE SOLID TNND COPPER GROUND WIRES FROM TOWER GROUND BAR (TGB) TO GROUND RING. ALL CONNECTIONS TO BE CADWELD.

EGB EXTERIOR GROUND BAR: SHELTER MANUFACTURER FURNISHED AND INSTALLED 24"x4"x1/4" TNND COPPER GROUND BAR ON EXTERIOR SIDEWALL OF SHELTER BELOW COAX BUILDING ENTRY.

IEHG INTERIOR/EXTERIOR HOOD GROUND: E.C. TO FURNISH AND INSTALL TWO (2) #2 AWG BARE SOLID TNND COPPER GROUND WIRES FROM THE INTERIOR / EXTERIOR GENERATOR HOOD TO GROUND RING. ALL CONNECTIONS TO BE CADWELD.

MGB MASTER GROUND BAR: SHELTER MANUFACTURER FURNISHED AND INSTALLED 24"x4"x1/4" TNND COPPER GROUND BAR ON INTERIOR SIDEWALL OF SHELTER BELOW COAX BUILDING ENTRY.

DCG DOOR CANOPY GROUND: E.C. TO FURNISH AND INSTALL ONE (1) #2 AWG BARE SOLID TNND COPPER GROUND WIRE FROM DOOR CANOPY TO SHELTER GROUND RING. CONNECTION AT DOOR CANOPY TO BE MECHANICAL, CONNECTION AT GROUND RING TO BE CADWELD.

IBCG ICE BRIDGE CHANNEL GROUND: E.C. TO FURNISH AND INSTALL ONE (1) #2 AWG BARE SOLID TNND COPPER GROUND JUMPER WIRE FROM ICE BRIDGE CHANNEL TO ICE BRIDGE SUPPORT POST. ALL CONNECTIONS TO BE CADWELD.

IBSG ICE BRIDGE SUPPORT GROUND: E.C. TO FURNISH AND INSTALL ONE (1) #2 AWG BARE SOLID TNND COPPER GROUND WIRE FROM ICE BRIDGE SUPPORT POST TO GROUND RING. ALL CONNECTIONS TO BE CADWELD.

ACG AIR CONDITIONER GROUND: E.C. TO FURNISH AND INSTALL ONE (1) #2 AWG BARE SOLID TNND COPPER GROUND WIRE FROM AIR CONDITIONER CABINET TO GROUND RING. CONNECTION AT AIR CONDITIONER CABINET TO BE MECHANICAL, CONNECTION AT GROUND RING TO BE CADWELD (TYPICAL OF 2).

GEG GENERATOR EXHAUST GROUND: E.C. TO FURNISH AND INSTALL ONE (1) #2 AWG BARE SOLID TNND COPPER GROUND WIRE FROM GENERATOR EXHAUST TO GROUND RING. CONNECTION AT GENERATOR EXHAUST TO BE MECHANICAL, CONNECTION AT GROUND RING TO BE CADWELD (TYPICAL OF 1).

GR 5/8" DIA. x 10' LONG TNND COPPER CLAD STEEL GROUND ROD DRIVEN VERTICAL TOP OF ROD 30" MIN. BELOW GRADE. SPACING OF GROUND RODS 10' MIN TO TWICE THE LENGTH OF THE ROD USED. ALL CONNECTIONS TO BE CADWELD.

SPG SHELTER PLATE GROUND: E.C. TO FURNISH AND INSTALL ONE (1) #2 AWG BARE SOLID TNND COPPER GROUND WIRE FROM SHELTER PLATE TO SHELTER GROUND RING. TYPICAL OF 2 AT SHELTER AND ON DIAGONAL CORNERS. CONNECTION AT GROUND RING TO BE CADWELD.

NOTE: ALL GROUND LEADS AT TOWER, ICE BRIDGE SUPPORT POSTS, FENCE POSTS, ETC. TO BE ROUTED IN 1/2" NON-METALLIC PVC FLEX CONDUIT. GROUND LEADS AT SHELTER FROM EXTERNAL GROUND BARS, COAX ENTRY, LOUVERS, PIPES, ETC. TO BE ROUTED IN 1/2" NON-METALLIC PVC RIGID CONDUIT SECURED TO SHELTER WALL WITH AT LEAST ONE (1) NON-METALLIC CONDUIT CLAMP 36" MAX. SPACING. CONDUIT TO BE 4" MAX. FROM APPLIANCE CONNECTION AND EXTEND 18" MIN. BELOW GRADE.

TYPICAL GROUNDING NOTES

1. ALL GROUND CABLE IN CONCRETE OR THROUGH WALL SHALL BE IN 3/4" PVC CONDUIT. NO METALLIC CONDUIT SHALL BE USED FOR GROUNDING CONDUCTOR SLEEVES.
2. GROUND ALL EXPOSED METALLIC OBJECTS USING A TWO-HOLE NEMA DRILLED CONNECTOR SUCH AS THOMAS & BETTS #32207 OR APPROVED EQUAL
3. THE CONTRACTOR SHALL NOTIFY THE PYRAMID NETWORK SERVICES, LLC REPRESENTATIVE WHEN THE GROUND RING IS INSTALLED SO THAT THE REPRESENTATIVE CAN INSPECT GROUND RING BEFORE IT IS CONCEALED.
4. ALL EXTERIOR GROUND CONDUCTORS INCLUDING GROUND RING SHALL BE #2 AWG SOLID BARE TINNED COPPER. MAKE ALL GROUND CONNECTIONS AS SHORT AND DIRECT AS POSSIBLE. AVOID SHARP BENDS. THE RADIUS OF ANY BEND SHALL NOT BE LESS THAN 8" AND THE INCLUSIVE ANGLE OF ANY BEND SHALL NOT EXCEED 90'. GROUNDING CONDUCTORS SHALL BE ROUTED DOWNWARD TOWARD THE BURIED GROUND RING.
5. ALL BELOW GROUND EXTERNAL CONNECTIONS SHALL BE EXOTHERMICALLY WELDED. ALL EXOTHERMIC WELDS TO BURIED GROUND RING SHALL BE THE PARALLEL-TYPE. EXCEPT FOR THE GROUND RODS WHICH ARE TEE-TYPE EXOTHERMIC WELDS. REPAIR ALL GALVANIZED SURFACES THAT HAVE BEEN DAMAGED BY EXOTHERMIC WELDING. USE SPRAY GALVANIZED SUCH AS HOLUB LECTROSOL #15-501.
6. WHERE MECHANICAL CONNECTORS (TWO-HOLE OR CLAMP) ARE USED, APPLY A LIBERAL PROTECTIVE COATING OF A CONDUCTIVE ANTI-OXIDE COMPOUND ON ALL CONNECTORS. PROVIDE LOCK WASHERS ON ALL MECHANICAL CONNECTORS. USE STAINLESS STEEL HARDWARE THROUGHOUT. THOROUGHLY REMOVE ALL PAINT AND CLEAN ALL DIRT FROM SURFACES REQUIRING GROUND CONNECTORS, REPAINT TO MATCH EXISTING AFTER CONNECTION IS MADE TO MAINTAIN CORROSION RESISTANCE. ALL GROUND CONNECTIONS SHALL BE APPROVED FOR THE TYPES OF METALS BEING ATTACHED TO.
7. A RESISTANCE TO GROUND OF (10) OHMS OR LESS IS REQUIRED FOR ALL MOTOROLA SITES. THE CONTRACTOR SHOULD RETAIN HIS OWN TESTER AT HIS OWN EXPENSE. IN ADDITION, A THIRD PARTY SHOULD BE HIRED TO OBTAIN MEGGER AND SWEEP RESULTS ON ALL SITES INCLUSIVE OF WHAT RESULTS THE CONTRACTOR SUBMITS, TO INSURE PROPER QUALITY CONTROL ON ALL SITES. SCHEDULE FLNAL MEGGER TEST SUCH THAT THE PYRAMID NETWORK SERVICES, LLC REPRESENTATIVE CAN BE PRESENT FOR FIELD VERIFICATION. REFER TO THE MOTOROLA MASTER SPECIFICATION FOR MEGGER TESTING PROCEDURES. IF THE FINAL GROUNDING RESISTANCE MEASUREMENT EXCEEDS 10 (TEN) OHMS, THE CONTRACTOR SHALL NOTIFY THE PYRAMID NETWORK SERVICES, LLC REPRESENTATIVE.
8. ALL MOUNTING HARDWARE SHALL BE STAINLESS STEEL
9. THE GROUND CONDUCTORS SHALL BE RUN STRAIGHT FOR MINIMUM INDUCTANCE AND VOLTAGE DROP. SINCE CABLE BENDS INCREASE INDUCTANCE, THE MINIMUM REQUIRED BENDING RADIUS IS 8 INCHES WHEN BENDS ARE UNAVOIDABLE. ALL METAL WORK WITHIN 10 FEET OF THE GROUND RING SHALL BE DIRECTLY BONDED TO THIS GROUND SYSTEM, WITHOUT USING SERIES OR DAISY CHAIN CONNECTION ARRANGEMENTS.
10. PAINT, ENAMEL, LACQUER AND OTHER ELECTRICALLY NON-CONDUCTIVE COATINGS SHALL BE REMOVED FROM THREADS AND SURFACE AREAS WHERE CONNECTIONS ARE MADE 10 ENSURE GOOD ELECTRICAL CONTINUITY.
11. CONNECTIONS BETWEEN DISSIMILAR METALS SHALL NOT BE MADE UNLESS THE CONDUCTORS ARE SEPARATED BY A SUITABLE MATERIAL. THAT IS A PART OF THE ATTACHMENT DEVICE LISTED AND APPROVED FOR USE WITH THE SPECIFIC DISSIMILAR METALS MAY BE USED FOR THE PURPOSE.
12. ALL BELOW GRADE GROUND SYSTEM CONDUCTORS SHALL BE A MINIMUM DEPTH OF 30".

GROUNDING LEGEND

SYMBOL	DESCRIPTION
◉	5/8" x 10'-0" COPPER OR STAINLESS STEEL COPPERCLAD GROUND ROD
◎	GROUND ROD WITH INSPECTION WELL
•	EXOTHERMIC WELD (CADWELD)
——	#2 SOLID TINNED COPPER WIRE UNLESS OTHERWISE NOTED
■	MECHANICAL CONNECTION
ESG	ELECTRICAL SERVICE GROUND
TSG	TELCO SERVICE GROUND

PRELIMINARY NOT FOR CONSTRUCTION

NO.	DATE	REVISIONS	BY	CHK	APP'D
B	12-10-18	PRELIMINARY CDs	AML	MJA	
A	11-02-18	LEASE EXHIBIT	MLM	MJA	

MISSION 1 COMMUNICATIONS
6202 Constitution Drive, Suite C
Fort Wayne, IN 46804

PYRAMID Network Services, LLC

MOTOROLA SOLUTIONS

GROUNDING SCHEMATIC AND NOTES

MOORE PARK
E MOORE PARK TRAIL
BAILEY, MI 49303

E-5

THIS DRAWING IS COPYRIGHTED AND IS THE SOLE PROPERTY OF THE OWNER. IT IS PRODUCED SOLELY FOR USE BY THE OWNER AND ITS AFFILIATES. REPRODUCTION OR USE OF THIS DRAWING AND/OR THE INFORMATION CONTAINED IN IT IS FORBIDDEN WITHOUT THE WRITTEN PERMISSION OF THE OWNER.

ITS IS A VIOLATION OF LAW FOR ANY PERSON, UNLESS THEY ARE ACTING UNDER THE DIRECTION OF A LICENSED PROFESSIONAL ENGINEER, TO ALTER THIS DOCUMENT.

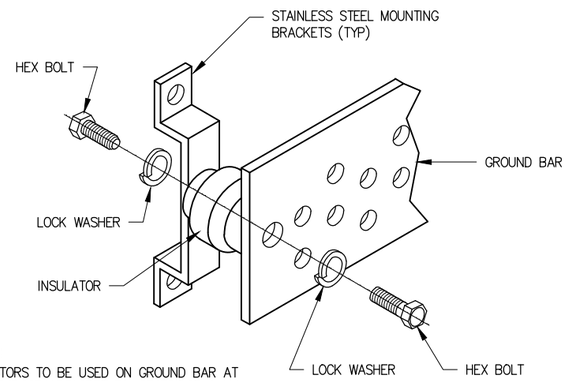

NOTE:
ISOLATORS TO BE USED ON GROUND BAR AT TOWER BASE ADJACENT TO ICE BRIDGE ONLY. GROUND BAR AT ANTENNA ELEVATION TO BE ATTACHED DIRECTLY TO TOWER STEEL.

1 Ground Bar Installation

SCALE: 3" = 1'-0"

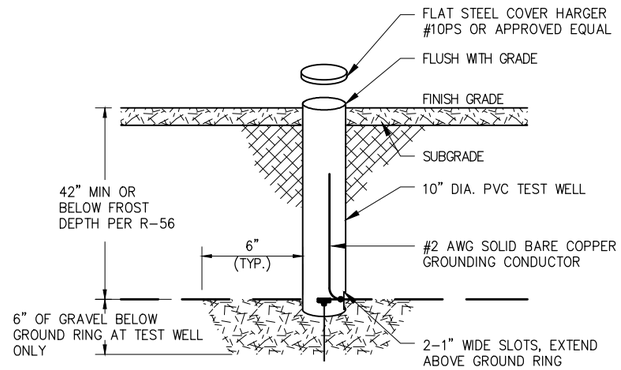

3 Grounding Inspection Test Well

NOT TO SCALE

NOTES:

1. DO NOT INSTALL CABLE GROUND KIT AT A BEND AND ALWAYS DIRECT GROUND WIRE DOWN TO GROUND BAR
2. THIS DETAIL IS TYPICAL FOR EACH COAX / HYBRID CABLE WHERE IT IS SPECIFIED TO BE GROUNDED
3. CABLE TO BE GROUNDED AT ANTENNA LEVEL AND PRIOR TO ENTERING SHELTER ENTRY PANEL
4. CABLE ALSO TO BE GROUNDED TO GROUND BAR AT TOWER BASE IF APPLICABLE

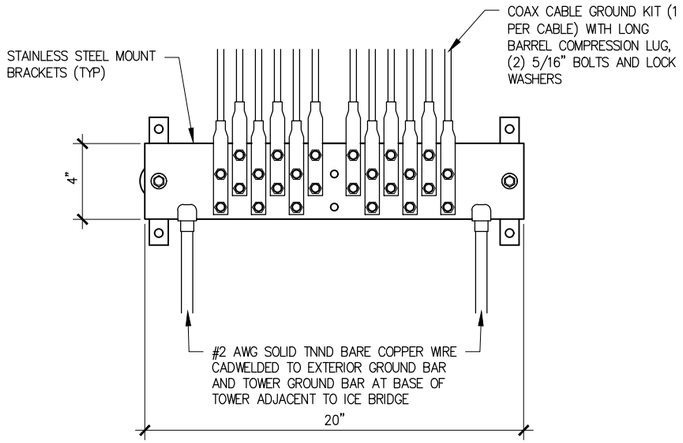

2 Tower Ground Bar (TGB)

SCALE: 1 1/2" = 1'-0"

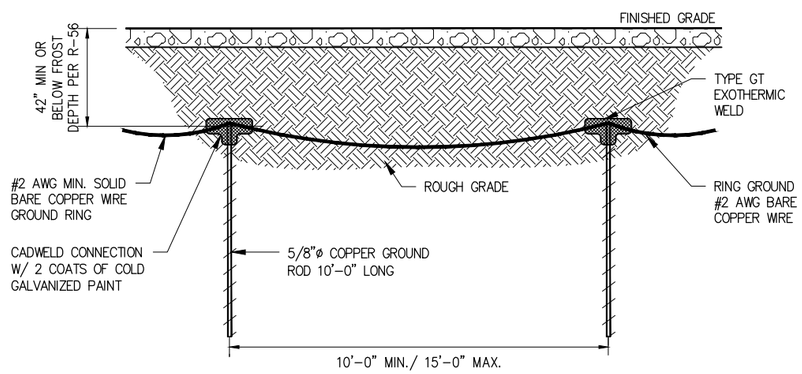

4 Grounding Rod Detail

SCALE: 1/4" = 1'-0"

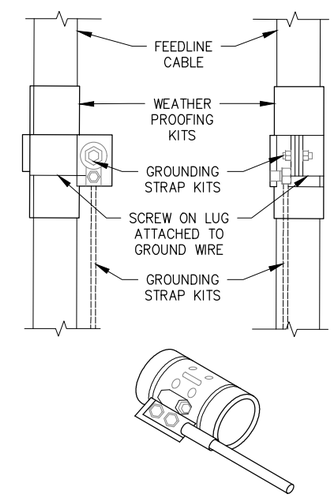

5 Coax Cable Ground Kit Detail

SCALE: N.T.S.

PRELIMINARY NOT FOR CONSTRUCTION

NO.	DATE	REVISIONS	BY	CHK	APP'D
B	12-10-18	PRELIMINARY CDs	AML	MJA	
A	11-02-18	LEASE EXHIBIT	MLM	MJA	

MISSION 1 COMMUNICATIONS
6202 Constitution Drive, Suite C
Fort Wayne, IN 46804

PYRAMID Network Services, LLC

MOTOROLA SOLUTIONS

GROUNDING DETAILS

MOORE PARK
E MOORE PARK TRAIL
BAILEY, MI 49303

E-6

THIS DRAWING IS COPYRIGHTED AND IS THE SOLE PROPERTY OF THE OWNER. IT IS PRODUCED SOLELY FOR USE BY THE OWNER AND ITS AFFILIATES. REPRODUCTION OR USE OF THIS DRAWING AND/OR THE INFORMATION CONTAINED IN IT IS FORBIDDEN WITHOUT THE WRITTEN PERMISSION OF THE OWNER.

ITS IS A VIOLATION OF LAW FOR ANY PERSON, UNLESS THEY ARE ACTING UNDER THE DIRECTION OF A LICENSED PROFESSIONAL ENGINEER, TO ALTER THIS DOCUMENT.

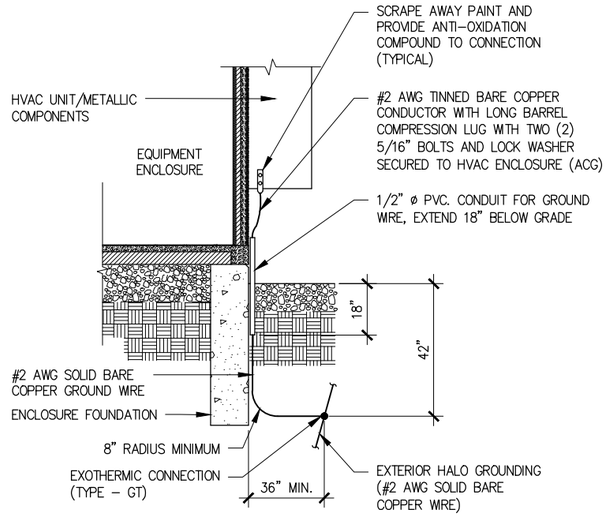

1 HVAC (ACG)/Metallic Components Grounding

SCALE: 1/4" = 1'-0"

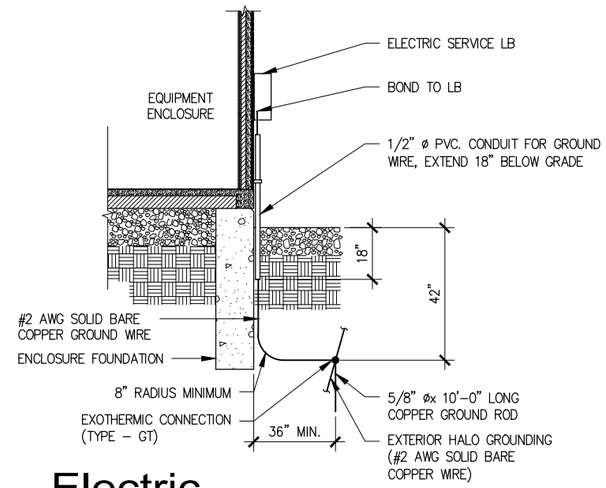

2 Electric Service Grounding

SCALE: 1/4" = 1'-0"

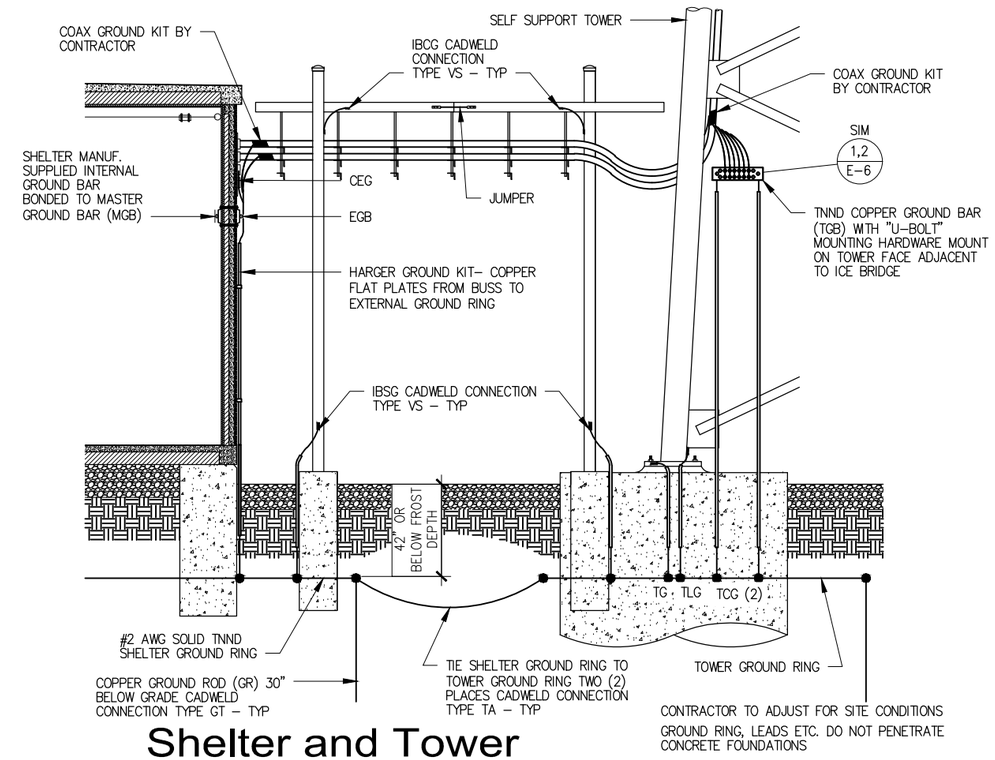

3 Shelter and Tower Grounding Elevation Schematic

SCALE: 1/4" = 1'-0"

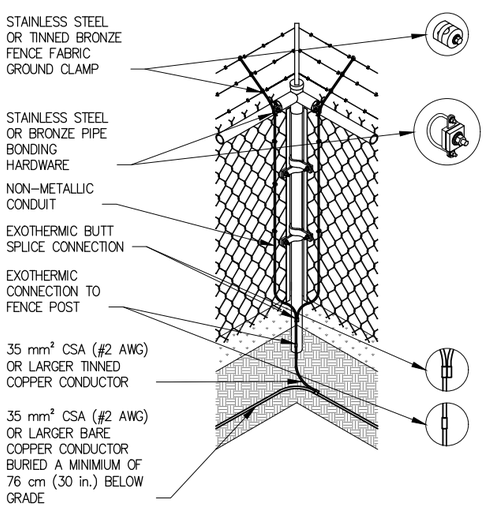

4 Fence Fabric and Deterrent Wiring Bonding

NO SCALE

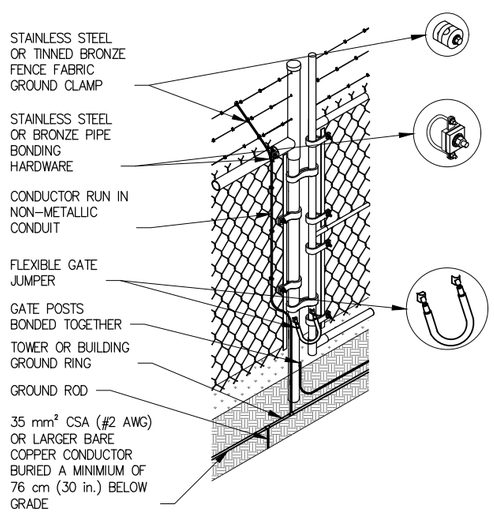

5 Gate Bonding

NO SCALE

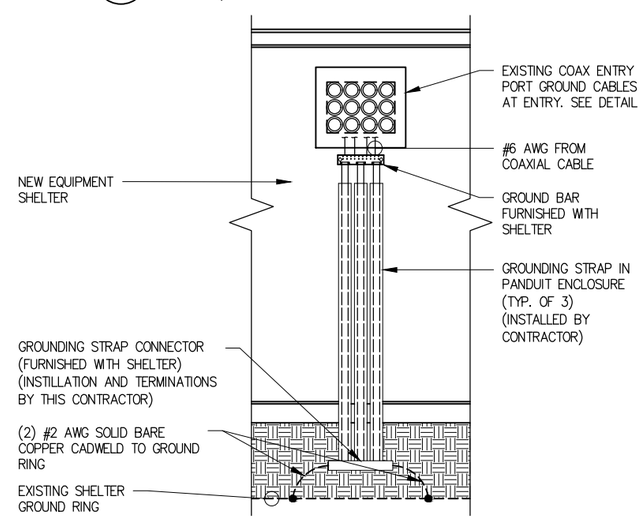

6 Shelter Grounding Detail

SCALE: 1/4" = 1'-0"

PRELIMINARY NOT FOR CONSTRUCTION

NO.	DATE	REVISIONS	BY	CHK	APP'D
B	12-10-18	PRELIMINARY CDs	AML	MJA	
A	11-02-18	LEASE EXHIBIT	MLM	MJA	

MISSION 1 COMMUNICATIONS
6202 Constitution Drive, Suite C
Fort Wayne, IN 46804

PYRAMID Network Services, LLC

MOTOROLA SOLUTIONS

GROUNDING DETAILS

MOORE PARK
E MOORE PARK TRAIL
BAILEY, MI 49303

E-7

THIS DRAWING IS COPYRIGHTED AND IS THE SOLE PROPERTY OF THE OWNER. IT IS PRODUCED SOLELY FOR USE BY THE OWNER AND ITS AFFILIATES. REPRODUCTION OR USE OF THIS DRAWING AND/OR THE INFORMATION CONTAINED IN IT IS FORBIDDEN WITHOUT THE WRITTEN PERMISSION OF THE OWNER.

ITS IS A VIOLATION OF LAW FOR ANY PERSON, UNLESS THEY ARE ACTING UNDER THE DIRECTION OF A LICENSED PROFESSIONAL ENGINEER, TO ALTER THIS DOCUMENT.

LP TANK MONITOR

- G.C. TO SUPPLY MONITOR UNIT
- G.C. TO SUPPLY CAT 5 FROM UNIT TO ALARM UNIT IN SHELTER
- G.C. TO SUPPLY CAT 5 FROM ALARM UNIT IN SHELTER TO ALARM PUNCH DOWN
- UNIT TO BE POWERED FROM RECEPTACLE IN SHELTER

THE CONTRACTOR IS RESPONSIBLE FOR PURCHASING AND INSTALLING A PROPANE TANK MONITOR (MICRO-DESIGN. INC., MODEL No. LPG STM 94442AU) WITH A BATTERY BACKUP (APC MODEL ES 350).

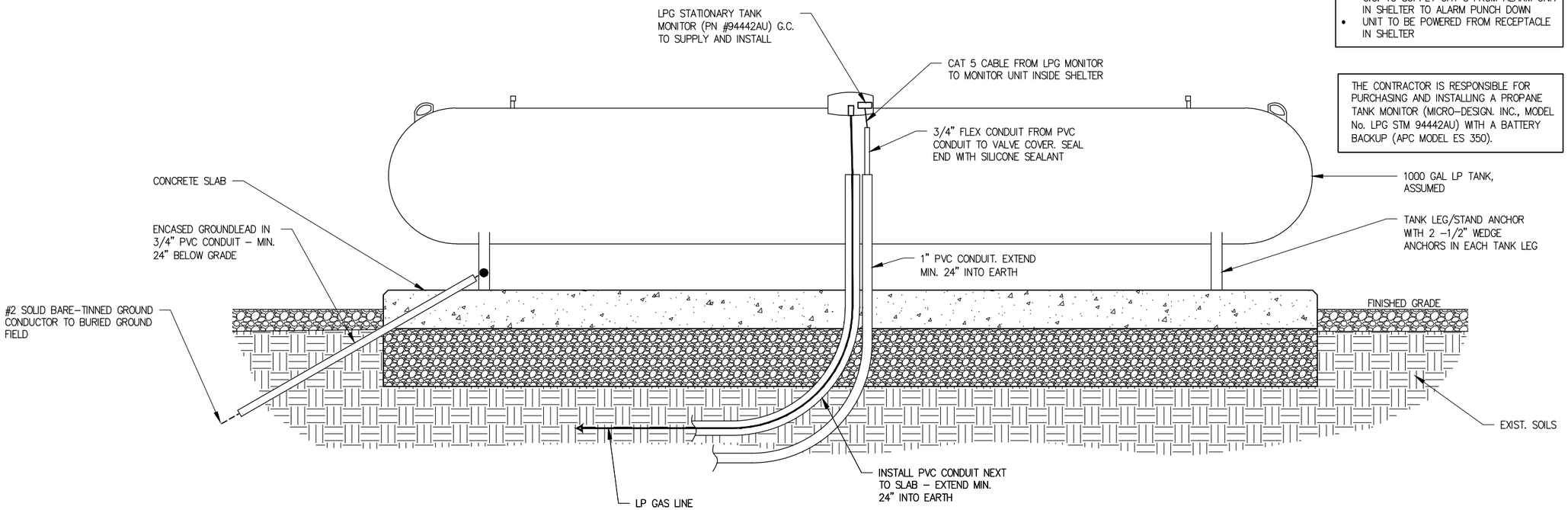

1 LP Tank Detail

SCALE: 1/2" = 1'-0"

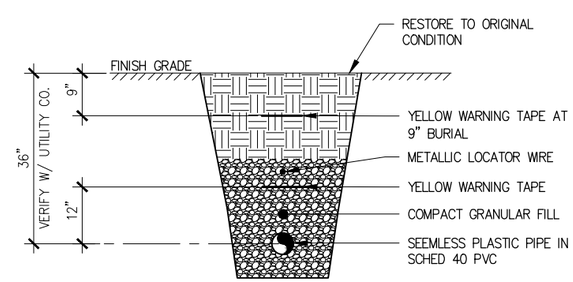

2 LP Gas Service from LP tank to Generator

SCALE: 3/8" = 1'-0"

PRELIMINARY NOT FOR CONSTRUCTION

NO.	DATE	REVISIONS	BY	CHK	APP'D
B	12-10-18	PRELIMINARY CDs	AML	MJA	
A	11-02-18	LEASE EXHIBIT	MLM	MJA	

MISSION 1 COMMUNICATIONS
6202 Constitution Drive, Suite C
Fort Wayne, IN 46804

PYRAMID Network Services, LLC

MOTOROLA SOLUTIONS

PROPANE DETAILS

MOORE PARK
E MOORE PARK TRAIL
BAILEY, MI 49303

E-8

THIS DRAWING IS COPYRIGHTED AND IS THE SOLE PROPERTY OF THE OWNER. IT IS PRODUCED SOLELY FOR USE BY THE OWNER AND ITS AFFILIATES. REPRODUCTION OR USE OF THIS DRAWING AND/OR THE INFORMATION CONTAINED IN IT IS FORBIDDEN WITHOUT THE WRITTEN PERMISSION OF THE OWNER.

ITS IS A VIOLATION OF LAW FOR ANY PERSON, UNLESS THEY ARE ACTING UNDER THE DIRECTION OF A LICENSED PROFESSIONAL ENGINEER, TO ALTER THIS DOCUMENT.

Appendix 7.4
Permits and Documentation

Muskegon County Property Viewer - Parcel Report

Parcel Information: *61-13-013-100-0001-00*

Report Generated: *4/24/2019 10:52:12 AM*

Owner Name:	COUNTY OF MUSKEGON
Property Address:	WHITE RD BAILEY, MI 49303

Assessed Value ($):	0	**Property Class Code:**	703
SEV Value ($):	0	**Zoning (per Assessor):**	A - 1
Taxable Value ($):	0	**GIS Acreage:**	27.64575991
PRE %:	0		

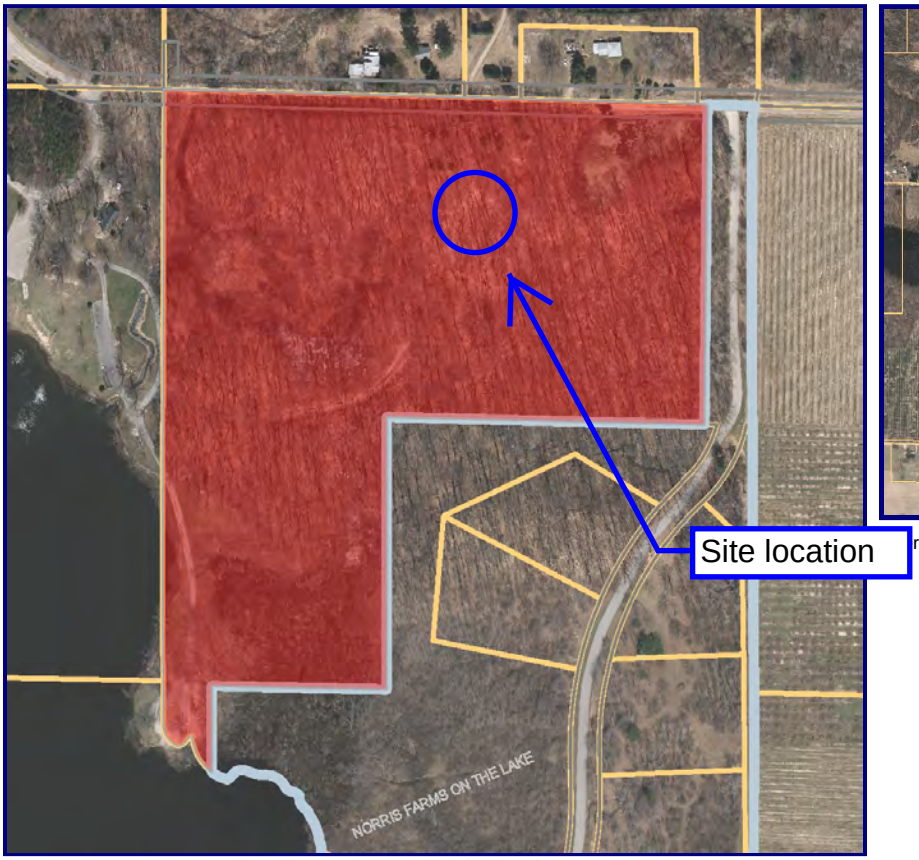

Map not presented to a specific scale Subject Parcel Highlighted in red

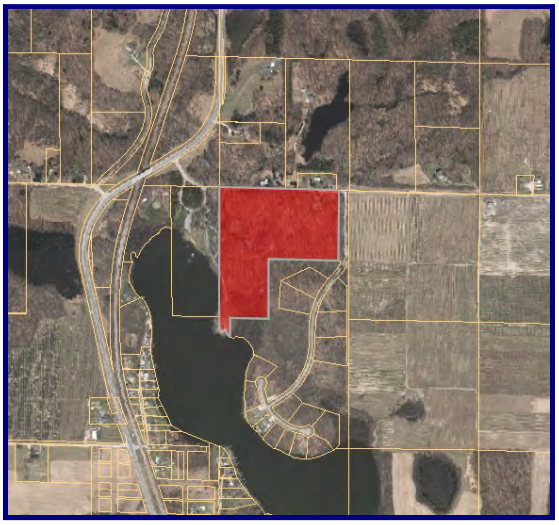

rview Location Map

See page two (2) for assessment roll description

This map/report is a user generated static output from the Muskegon County GIS Property Viewer mapping site and is for reference only. Data layers that appear on this map may or may not be accurate, current, or otherwise reliable.

Muskegon County Property Viewer - Parcel Report

Assessment Roll Description - NOT A RECORDED LEGAL DESCRIPTION

CASNOVIA TOWNSHIP
SEC 13 T10N R13W
W 1225 FT OF N 1329.45 FT OF NW 1/4 OF NW 1/4
EXC S 609.45 FT OF E 700 FT THEREOF.
AND ALSO INCLUDES W 110 FT OF GOV'T LOT 1.

If description page is full, then the remaining portion of the description has been truncated.

MUSKEGON COUNTY GIS

This map/report is a user generated static output from the Muskegon County GIS Property Viewer mapping site and is for reference only. Data layers that appear on this map may or may not be accurate, current, or otherwise reliable.

ARTICLE 9

EXCLUSIVE AGRICULTURAL (A-1)

Section 9.01. **PURPOSE.** The purpose of the "A-1" District is twofold; first, to maintain, preserve and enhance prime agricultural lands which have historically exhibited high crop yields; second, the intent of the district is to allow maximum freedom of operations for agricultural pursuits and to protect such uses from encroachment of non-agricultural uses.

Section 9.02. **PRINCIPAL USES PERMITTED.**

(a) Any non-intensive farm or agricultural activities including stock nurseries, animal and livestock raising.

(b) The sale of farm or dairy produce which has been raised on the farm from which it is to be sold.

(c) Single family dwellings.

(d) Home occupations in accordance with the provisions of Section 3.11.
[Ord. # 100-900, effective 07/22/1993]

(e) State licensed Migrant Labor Housing. Migrant Labor housing shall be permitted so long as a State License is obtained for any Migrant Labor Housing and so long as an informal site plan is provided to the Zoning Administrator.
[Ord. # 110.900, effective 11/06/1997]

(f) Signs, when in accordance with the provisions of Section 3.21.
[Ord. # 01-2006, effective 10/27/2006]

(g) Family child care homes limited to six (6) or fewer minor children.
[Ord. # 02-2008, effective 12/26/2008]

(h) State licensed residential facility limited to six (6) or fewer adults.
[Ord. # 02-2008, effective 12/26/2008]

Section 9.03. **SPECIAL PERMIT USES.** Subject to the conditions and limitations found in Article 17.

(a) Intensive farming and agricultural operations as outlined in the "A-2" Intensive Agricultural District.

(b) Public utility buildings and structures necessary for the service of the community except that:

(1) There is no zoning restriction for utilities to be located in public streets or public rights-of-way.

(2) Public utility activities of an industrial character such as repair and maintenance yards, storage facilities, or activities which generate electronic interference are prohibited.

(c) Veterinarian clinics and facilities for the care and/or boarding of animals including kennels.

(d) Commercial greenhouses.
[Ord. # 110.903-A, effective 2/5/1992]

(e) Commercial campgrounds.
[Ord. amendment, effective 6/11/1998]

(f) Recreational facilities for public use.

(g) Group child care homes for more than six (6) minor children.
[Ord. # 02-2008, effective 12/26/2008]

(h) State licensed residential group facility for more than six (6) adults.
[Ord. # 02-2008, effective 12/26/2008]

(i) Social Event Venues.
[Ord.#2017-03, effective 1/20/2017]

Section 9.04. **ACCESSORY USES.** Those buildings, structures and uses customarily accessory to those principal and special uses as set forth above are permitted subject to the provisions of Article 14. *[New section 9.04 Ord. # 01-2006, effective 10/27/2006]*

Section 9.05. **ADDITIONAL REQUIREMENTS.** Height, lot area, frontage width, yard area and floor area requirements and restrictions shall further be complied with as set forth in Article 16. *[New section 9.05 Ord. # 01-2006, effective 10/27/2006]*

ARTICLE 17

SPECIAL LAND USE PERMITS

Section 17.01. **PURPOSE.** Land and structure uses possessing these particularly unique characteristics are designated as Special Uses and may be authorized by the issuance of Special Use Permits with such conditions and safeguards attached as may be deemed necessary for the protection of the public welfare. The following standards and procedures are designed not only for all special uses referred to in various districts, but are to be applied also to PURD Districts.

Section 17.02. **PROCEDURES FOR MAKING APPLICATION.**

(a) *Applicant.* Any person owning, or with the consent of the owner, or a person having an interest in the subject property, may file an application for one or more Special Use Permits provided for this Ordinance in the zoning district in which the land is situated.

(b) *Application.* Application shall be submitted through the Township Clerk to the Planning Commission on a special form provided for that purpose; each application shall be accompanied by the payment of a fee in accordance with the duly adopted "Schedule of Fees", to cover the cost of processing the application. The "Schedule of Fees" shall be approved by the Township Board and attached to all public copies of this Ordinance, including those which shall be kept by the Casnovia Township and Muskegon County Clerks. No part of any fee shall be refundable.

Section 17.03. **REQUIRED IN APPLICATION.** Every application shall be accompanied by a site plan or development plan, drawn to a readable scale showing:

(a) Property dimensions and legal description,
(b) Size, shape and location of existing and proposed buildings,
(c) Topographical information,
(d) Hydrographical information (optional),
(e) Soil Types (optional),
(f) Photographs (optional),
(g) Streets and highways; private easements,
(h) Parking, parking spaces and driveways,
(i) Loading zones,
(j) Entrances to public streets,
(a) Anticipated amount of traffic to be generated and circulation of traffic,
(b) Building(s) location, dimensions and proposed uses,
(m) Description of building design, including proposed construction materials,
(n) Drainage facilities, watercourses, water bodies, including surface drainage,
(o) Location and description of method to dispose of sanitary wastes,

(p) All proposed landscaping and significant existing vegetation and existing vegetation to be removed.
(q) Types of machinery, power usage, electrical equipment, and watts, discarded materials and emissions produced from the activity of the use,
(r) Signs proposed,
(s) Any additional information such as legal survey, engineering or architectural drawings, or other information deemed to by them to be necessary to carry out their duties.

Section 17.04. **ADDITIONAL INFORMATION AND WAIVER.** The Planning Commission may require maps, soil, topographical and hydrographic studies, engineering or architectural drawings and plans, photographs, legal surveys and in case of larger projects, environmental impact statements, but the Planning Commission is not limited hereby, and may require such other documents and information as may be appropriate or needed for its review. The Planning Commission may, upon request with a showing that information is not needed to make a determination, waive any of the above points of information otherwise required.

Section 17.05. **PROCEDURE FOR REVIEW AND FINDINGS–PUBLIC HEARING.** The Planning Commission shall review the application and site plan as soon as practicable following the filing and shall set a date for the public hearing within forty-five (45) days thereafter. One (1) notice of a public hearing on the special land use request shall be delivered and published in accordance with Section 20.10 of this ordinance. The Planning Commission shall hold its public hearing, compile information and input received and shall make its recommendation to the Township Board within a reasonable time. *[Ord. # 02-2006, effective 10/27/2006]*

Section 17.06. **GENERAL STANDARDS FOR MAKING DETERMINATIONS.** The Planning Commission and the Township Board shall, upon separate occasions, review the particular facts and circumstances of each proposal in terms of all of the following standards and each shall find adequate evidence showing that the proposed use:

(a) Will be harmonious with and in accordance with the general objectives or with any specific objectives of the zoning ordinance;

(b) Will be designed, constructed, operated and maintained so as to be harmonious and appropriate in appearance with existing or intended character of the general vicinity and that such a use will not change the essential character of the same area;

(c) Will not be hazardous or disturbing to existing or future neighboring uses and will not cause disturbing emission of electrical discharges, dust, lights, vibrations, or noise;

(d) Will be served adequately by existing essential public facilities and services; such as highways, streets, police and fire protection, drainage structures, refuse disposal or schools; or that the persons or agencies responsible

for the establishment of the proposed use shall be able to provide adequately any such service;

(e) Will not create additional requirements at public cost for public facilities and services, and will not be detrimental to the economic welfare of the Township;

(f) Will not involve uses, activities, processes, materials and equipment and conditions of operation that will be detrimental to any persons, property or the general welfare by reason of excessive production of traffic, noise, smoke, fumes, glare, odors, or require outdoor storage of raw materials or discarded materials produced in the use processes;

(g) Will be consistent with the intent and purposes of this Ordinance;

(h) Whether a hazard to life, limb, or property caused by fire, flood, erosion or panic may be created by reason or as a result of the use, or by the structures to be used therefor, or by the inaccessibility of the property or structures, thereon for the convenience of entry and operation of fire and other emergency apparatus or by the undue concentration or assemblage of persons upon such plot;

(h) Whether the use, or the structures to be used therefore will cause an overcrowding of land or undue concentration of population;

(i) Whether the plot area is sufficient, appropriate and adequate for the use and the reasonable anticipated operation and expansion thereof.

Section 17.07. **CONDITIONS AND SAFEGUARDS; TERMINATION.** The following conditions may further apply to the grant of a Special Use Permit:

(a) Prior to the granting of a Special Use Permit, the Planning Commission may recommend any additional conditions or limitations upon the establishment, location, construction, maintenance or operation of the use authorized by the Special Use Permit as in its judgment may be necessary for the protection of the public interest.

(b) Conditions and requirements stated as part of Special Use Permit authorization shall be a continuing obligation of Special Use Permit holders. The Zoning Administrator shall make periodic investigations of developments authorized by Special Use Permits to determine compliance with all requirements.

(c) Special Use Permits may be issued for time periods as determined by the Planning Commission. Special Use Permits may be renewed in the same manner as originally applied for.

(d) Continuance or revocation of a Special Use Permit by the Board shall occur upon a determination by the Zoning Administrator that:

(1) The time limit granted has expired.

(2) Violations of conditions pertaining to the granting of a permit continue to exist more that thirty (30) days after an order to correct has been issued.

(3) If a Special Use Permit has been granted, but the use allowed is not commenced within six (6) months, it shall terminate automatically and a new application must be filed. A renewal of the permit may be requested before the end of the six (6) months.

(4) Except for nonuse, revocation of a granted permit may occur only after a hearing before the Board with good cause shown.

Section 17.08. **RECOMMENDATION TO TOWNSHIP BOARD.** Upon conclusion of the public hearing or at the next meeting thereafter, the Planning Commission shall recommend approval or denial of an application for a Special Use Permit to the Township Board. Recommendations shall include an accurate description of the proposed special use, a description of the property upon which the Special Use is sought to be located, recommendations and proposed conditions of the Planning Commission, along with a summary of the comments at the meeting of the Planning Commission considering the application.

Section 17.09. **TOWNSHIP BOARD; ISSUANCE/DENIAL OF SPECIAL USE PERMIT.** The Township Board may affirm, modify or deny the application for Special Use Permit with all conditions; and, if approved, instruct the Zoning Administrator to issue the Special Use Permit with the conditions. If the conditions are required prior to or with the permit, they shall be typed on paper and signed by the Township Clerk, as authorized by the Board and the applicant, and recorded with the County Register of Deeds.

Section 17.10. **DECISION.** Upon making a decision, the Township Board shall incorporate, in a statement of conclusion, the factual basis and reasons for the grant or denial of the application in written findings of fact.

Section 17.11. **MODIFICATION OF APPROVED SPECIAL USE PERMIT PLAN.** Once approval of the Special Use Permit Plan has been granted by the Township Board, changes to the approved plan shall require a resubmission to the Board of the modifications which shall not require the other procedural steps.

Section 17.12. **APPEALS AND QUESTIONS OF INTERPRETATION OF ORDINANCE.** Any interested person considering himself aggrieved by the decision of the Township in the granting or denial of the Special Use Permit shall have the right to appeal the said decision to the Circuit Court within thirty (30) days after a written decision is submitted to the Clerk. An "interested person" shall be the owner-developer, a person living within three hundred (300) feet of the site, or a person who can show a significant interest, whether economic or not. There shall be no appeal to the Zoning Board of Appeals.

For Inspections call:

IMS @ 616-863-9294

BUILDING PERMIT

Community: TWP of Casnovia

CK 16004

PP# 61-13-013-100.001.00 DATE 5-10-19 PERMIT NO. 19-007

APPLICANT Pyramid Network Services ADDRESS 6615 Towpath Rd E Syracuse NY 13057 Commercial CONTRACTOR'S LICENSE)

PERMIT TO install (TYPE OF IMPROVEMENT) (—) STORY (NO.) tower (PROPOSED USE) # of DWELLING UNITS —

AT (LOCATION) 17505 White Rd. ZONING DISTRICT

BETWEEN (Off White Rd) N Newaygo (CROSS STREET) AND Westveer Ln (CROSS STREET)

SUBDIVISION LOT SIZE See site plan

BUILDING IS TO BE 80 FT. WIDE BY 80 FT. LONG BY 475 FT IN HEIGHT AND SHALL CONFORM IN CONSTRUCTION TO TYPE (TYPE) 3-B USE GROUP U 2015MBC BASEMENT WALLS OR FOUNDATION Cement

REMARKS: install tower & equipment shelter (the police tower)

AREA OR VOLUME 310 Ft² ESTIMATED COST $ 465,000 PERMIT FEE $1,508.00

Doug Hopkins, Building Inspector

THE FOLLOWING INSPECTIONS **ARE REQUIRED** FOR YOUR CONSTRUCTION WORK:	YOU **MUST** KEEP APPROVED PLANS AND THIS CARD POSTED ON JOB SITE UNTIL FINAL INSPECTION PERFORMED. IF A CERTIFICATE OF OCCUPANCY IS REQUIRED, **NO ONE** SHALL OCCUPY THIS BUILDING **UNTIL AN APPROVED FINAL INSPECTION IS ON RECORD.**	PROJECTS MAY REQUIRE **SEPARATE** PERMITS FOR ELECTRICAL, PLUMBING AND MECHANICAL INSTALLATIONS.
☐ FORM OR FOOTING ☐ WALL (pre-backfill, after concrete poured) ☐ ROUGH-IN (prior to structural coverings). ☒ FINAL INSPECTION **BEFORE OCCUPANCY**		

The following items are **required** if applicable (marked x) to your project:

- ☐ Truss drawings posted on site at rough-in or final inspection for unconditioned accessory buildings
- ☒ Electrical permit
- ☐ Mechanical permit
- ☐ Plumbing permit
- ☐ Gas pressure test at inspection or verified with affidavit **before C/O issued**
- ☐ Final energy report or blower door report **before C/O issued**
- ☐ Truss diagrams **before C/O issued**

This list is not all-inclusive. We may ask you to submit additional documents not listed above.

This permit only covers building trades. You must acquire subtrade permits (i.e., electrical, mechanical, plumbing) separately.

The following list pertains to **Courtland Township** permits only:

You may not remove more than **500 cubic yards** from a parcel without a Special Use Permit per Section D, Chapter 12 of the Courtland Township Zoning Ordinance.

Setbacks are not measured from foundation wall but rather the nearest point of structure (e.g., eaves).

Any building used to house animals must be **at least 50 feet** from every lot line (e.g., barns and garages).

Permits expires after six months with no work started or without required inspections.

Revised March 15, 2019

Appendix 7.5
FCC EA Deficiency Checklist

FCC ENVIRONMENTAL ASSESSMENT

Applicant: Pyramid Network Services_____ FCC File No.: __A0858883_____

The Spectrum and Competition Policy Division, Wireless Telecommunications Bureau sends "deficiency letters" to individual licensees and applicants, including tower owners, who have submitted environmental assessments (EAs) with applications (*i.e.*, a filed FCC Form 601 or FCC Form 854) when the EA submitted is insufficient or lacks necessary documentation.

The following checklist is now used by the staff as an attachment to each deficiency letter to inform the licensee, applicant, or tower owner (collectively, "Applicant") concerning compliance with 47 C.F.R. § 1.1307 of the Commission's rules. In addition to compiling this information, Applicants are required to comply with all of the Commission's environmental rules, including 47 C.F.R. § 1.1311 (i.e., "environmental information to be included in the environmental assessment (EA)"), to determine whether a proposed facility may have significant effect on the environment.

For purposes of ease of review, Trileaf is providing explanation for each of the compliance criteria.

Pursuant to 47 C.F.R. § 1.1307, this EA provides insufficient information regarding the proposed facility's compliance with the following NEPA requirements:

_____ **(a)(1) will be located in an officially designated wilderness area**

Trileaf used site observations and reviewed the U.S. Geological Survey (USGS) 7.5-Minute Series Quadrangle (Grant Quadrangle, MI) and the National Wilderness Preservation System website and determined that the Project site is not located in an officially designated wilderness area. See Appendix 7.2.

_____ **(a)(2) will be located in an officially designated wildlife preserve**

Trileaf used site observations and reviewed the U.S. Geological Survey (USGS) 7.5-Minute Series Quadrangle (Grant Quadrangle, MI) and the United States Fish & Wildlife Service National Wildlife Refuge System website and determined that the Project site is not located in an official designated wildlife preserve. See Appendix 7.2.

_____ **(a)(3) may affect listed threatened or endangered species or designated critical habitats; or is likely to jeopardize the continued existence of any proposed endangered or threatened species or likely to result in the destruction or adverse modification of proposed critical habitats**

Trileaf used site observations, performed an Informal Biological Assessment, and consulted with the East Lansing Field Office of the United States Fish and Wildlife Service, and determined that no federally listed or state listed threatened or endangered species will be affected by the Project provided an emergence survey is performed at the site to demonstrate the absence of roosting bats before any trees are removed. See Appendix 7.2.

_____ **(a)(4) may affect districts, sites, buildings, structures or objects significant in American history, architecture, archeology, engineering or culture, that are listed, or are eligible for listing, in the National Register of Historic Places**

On December 20, 2018, Trileaf submitted the Form 620, with a "No Historic Properties in the Area of Potential Effects" determination. The Michigan State Housing Development Authority State Historic Preservation Office concurred with Trileaf's findings on February 8, 2019, stating there are no historic buildings, structures, districts, objects, or archaeological resources within the area of potential effects that will be affected by the project. See Appendix 7.2.

_____ **(a)(5) may affect Indian religious sites**

Trileaf contacted all interested Tribal organizations through the FCC's Tower Construction Notification System (TCNS). No tribes objected to this undertaking. The correspondence is included in Appendix 7.2.

_____ **(a)(6) will be located in a floodplain**

Trileaf reviewed the USGS topographic map, the Flood Insurance Rate Map (26121C0250D) to determine if the project was located within the 100-year flood plain. Based on the review, the site is not located within a mapped 100-year floodplain (Zone X). A copy of the FEMA flood map can be found in Appendix 7.1.

_____ **(a)(7) construction will involve significant change in surface features (*e.g.*, wetland fill, deforestation or water diversion)**

Trileaf conducted a field visit and reviewed the US Fish and Wildlife Service's National Wetlands Inventory Map, and the USGS topographic map, included in Appendix 7.1. Trileaf determined that the site is not located in a recognized National Wetland area.

_____ **(a)(8) will be equipped with high intensity white lights which are to be located in residential neighborhoods, as defined by the applicable zoning law**

Towers less than 499 feet are not equipped with high intensity white lights. Pyramid Network Services will not utilize high intensity white lights for the proposed undertaking.

_____ **(b) would cause human exposure to levels of radiofrequency radiation in excess of Commission-adopted guidelines**

The Radio Frequency will be in compliance with local zoning requirements and FCC guidelines.

Appendix 7.6
Qualifications of Environmental Professionals

TRILEAF™

PROFESSIONAL RESUME

LAUREN SERENO

PROJECT SCIENTIST

Education

B.S. Environmental Science
Lewis University / Romeoville, IL

Areas of Expertise

Ms. Sereno has experience performing site inspections and conducting environmental due diligence pursuant to EPA All Appropriate Inquiries (AAI) and the American Society of Testing and Materials (ASTM), as well as performing National Environmental Policy Act (NEPA) and National Programmatic Agreement (NPA) reviews for commercial real estate, lending, and wireless telecommunications projects.

Environmental service expertise includes:

Phase I Environmental Site Assessments
Historical City Directories
Indoor Air Quality Assessments
Information Section 7 Consultation
National Wetland Inventory Maps
Flood Insurance Rate Maps
Critical Habitat Maps
Environmental Evaluation Summaries
Archaeological and Architectural Impacts
Soil Characterization
Preliminary Risk Assessments
Field Reconnaissance
Section 106 Compliance
NEPA Environmental Assessments
Migratory Bird Evaluations
Form 620/621 Submittals
Historical Topographic Maps and Aerial Imagery
Mold and Lead-Based Paint Surveys
Soil and Groundwater Management Plans
Local Government Consultation
Native American Consultation
Land Use History

TRILEAF™

PROFESSIONAL RESUME

CLINT CARLSON

PROJECT MANAGER

Education

B.S. Environmental Science
Minor: Biology, Psychology
Carroll University / Waukesha, WI

Areas of Expertise

Mr. Carlson has experience performing site inspections and conducting environmental due diligence pursuant to EPA All Appropriate Inquiries (AAI) and the American Society of Testing and Materials (ASTM), as well as performing National Environmental Policy Act (NEPA) reviews for wireless telecommunications projects.

Environmental service expertise includes the preparation and/or review of:

Phase I Environmental Site Assessments
Phase II Environmental Site Assessments
Vapor Intrusion Studies
Limited Site Inspections
Indoor Air Quality Assessments
Asbestos Inspections
Environmental Evaluation Summaries
Informal Section 7 Consultation
National Wetlands Inventory Maps
Flood Insurance Rate Maps
Critical Habitat Maps
Soil Characterization
Environmental Oversight
Visual Impact Assessments
Field Reconnaissance
Historical Topographic Maps and Aerial Imagery
Land Use History
Mold and Lead-Based Paint Surveys
Preliminary Risk Assessments
Soil and Groundwater Management Plans
Section 106 Compliance
NEPA Environmental Assessments
Form 620/621 Submittals
Local Government Consultation
Migratory Bird Evaluations
Native American Consultation
Architectural Site Surveys
Architectural Site Audits

Certifications/Affiliations

OSHA 40-Hour HAZWOPER
ANSI/FCC RF Radiation Safety Competent Person
Chicago Wilderness Society Certified Prescribed Burn Crew Member
Illinois Licensed Asbestos Inspector
Illinois Licensed Lead Inspector
Wisconsin Licensed Asbestos Inspector
Michigan Licensed Asbestos Inspector
Iowa Licensed Asbestos Inspector